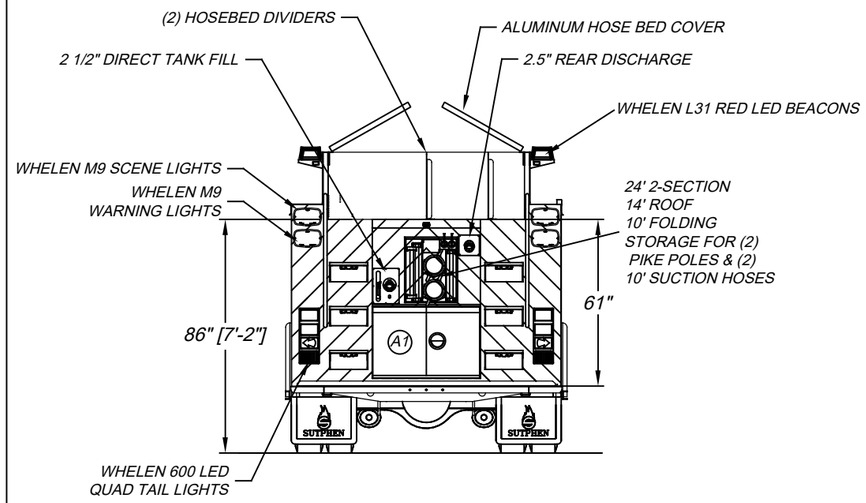

LEFT SIDE COMPARTMENTATION				
COMPT	DOORS	INSIDE DIMENSIONS	DOOR OPENING DIMENSIONS	VOLUME
L1	DOUBLE	40"W X 66"H X 26"D	37"W X 59 1/2"H	37.4 CU. FT.
L2	LIFT-UP	59"W X 31 1/2"H X 26"D	57"W X 29 3/4"H	28.4 CU. FT.
L3	DOUBLE	51 1/2"W X 66"H X 26"D	48 1/4"W X 58 1/2"H	47.4 CU. FT.

RIGHT SIDE COMPARTMENTATION				
COMPT	DOORS	INSIDE DIMENSIONS	DOOR OPENING DIMENSIONS	VOLUME
R1	DOUBLE	40"W X 66"H X 26"D	37"W X 59 1/2"H	37.4 CU. FT.
R2	LIFT-UP	59"W X 31 1/2"H X 26"D	57"W X 29 3/4"H	28.4 CU. FT.
R3	DOUBLE	51 1/2"W X 66"H X 26"D	48 1/4"W X 58 1/2"H	47.4 CU. FT.

REAR STEP COMPARTMENT				
COMPT	DOORS	INSIDE DIMENSIONS	DOOR OPENING DIMENSIONS	VOLUME
A1	DOUBLE	39 1/2"W X 28"H X 31"D	36 3/4"W X 19"H	19.8 CU. FT.

BASE STORAGE: 246 CU. FT.

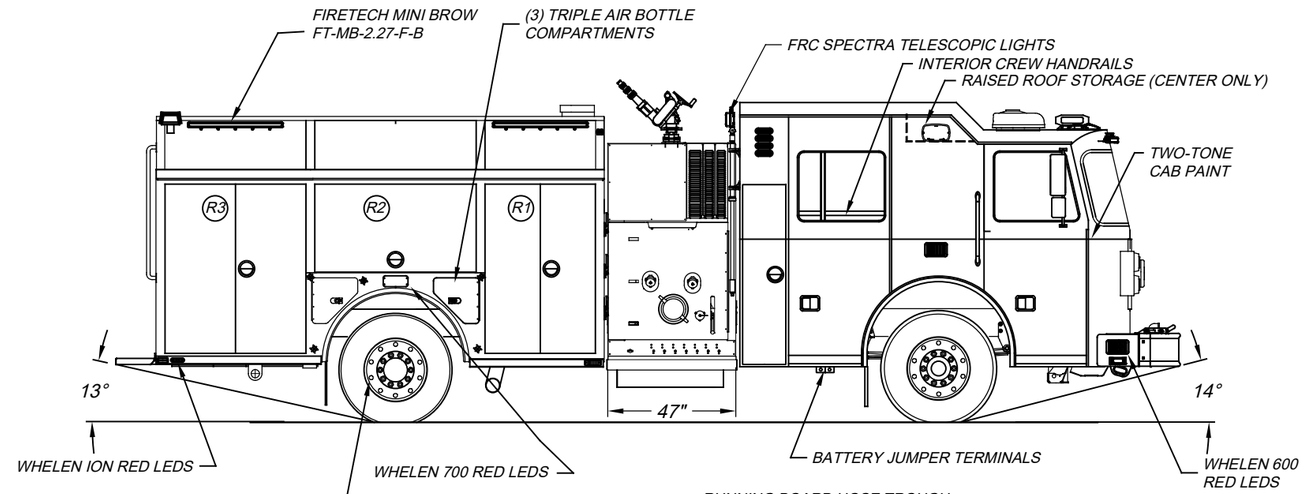

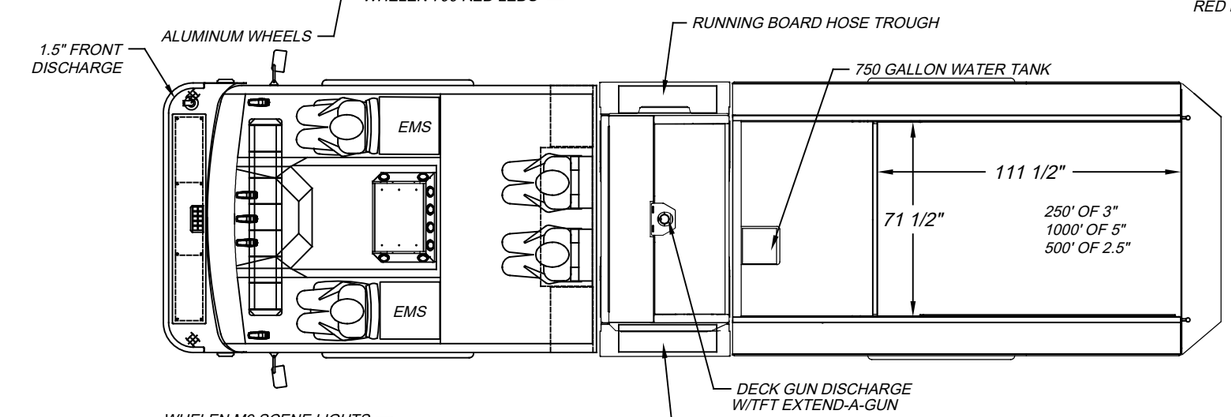

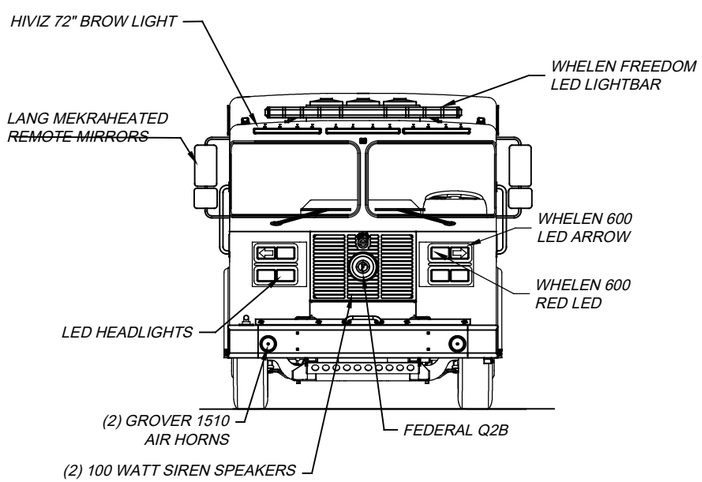

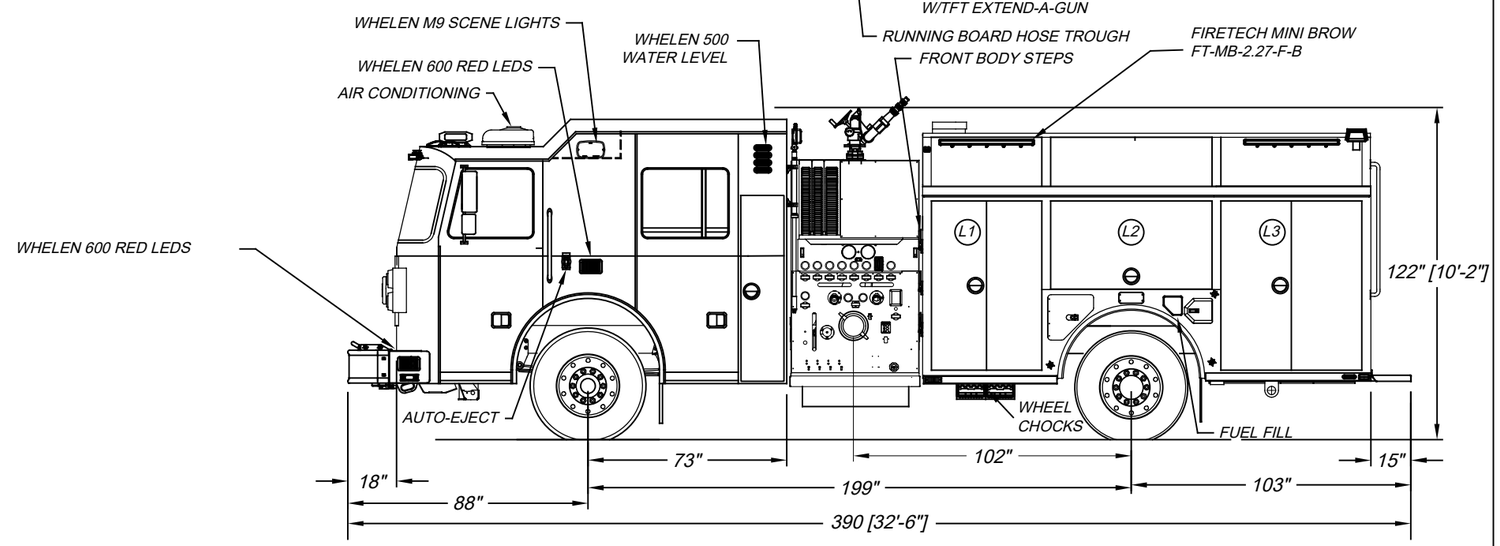

DIMENSIONS SHOWN ON THIS DRAWING ARE APPROXIMATE AND ARE SUBJECT TO MINOR DEVIATIONS DURING CONSTRUCTION.

IN THE EVENT OF A DISCREPANCY BETWEEN THE SUTPHEN SPECIFICATIONS AND DRAWING, THE SUTPHEN SPECIFICATIONS SHALL PREVAIL.

DRAWING IS FOR REFERENCE ONLY. SOME ITEMS PROPOSED MAY NOT BE SHOWN OR NOTED.

CUSTOMER APPROVAL

NAME:

TITLE:

DATE:

REV.	DESCRIPTION	BY	DATE
C	ADDED CHEVRON ABOVE A1	R.C.	4/20/2021
B	CORRECTED THE FRONT BUMPER	R.C.	12/15/2021
A	UPDATED TO SHOP ORDER REV A	R.C.	6/8/2021

THIS PRINT IS PROVIDED ON A RESTRICTED BASIS AND IS NOT TO BE USED IN ANY WAY DETRIMENTAL TO THE INTEREST OF SUTPHEN CORPORATION.

DRAWN BY: R.CAMPBELL

DATE: 5/3/2021

MFG. FACILITY: URBANA PUMPER DIVISION

SUTPHEN

Springville Fire & Rescue
Springville, AL

PROGRAM 1 CUSTOM PUMPER

DWG. NO.: HS-7055