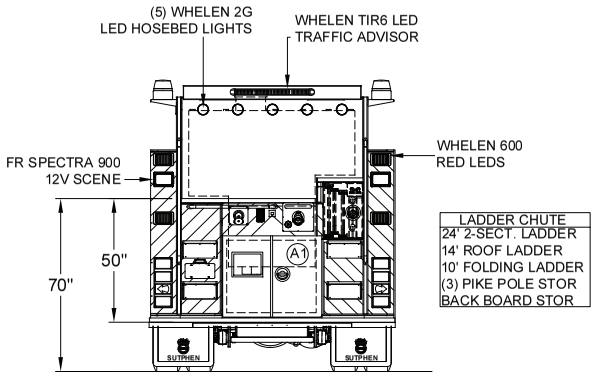

LADDER CHUTE
24' 2-SECT. LADDER
14' ROOF LADDER
10' FOLDING LADDER
(3) PIKE POLE STOR
BACK BOARD STOR

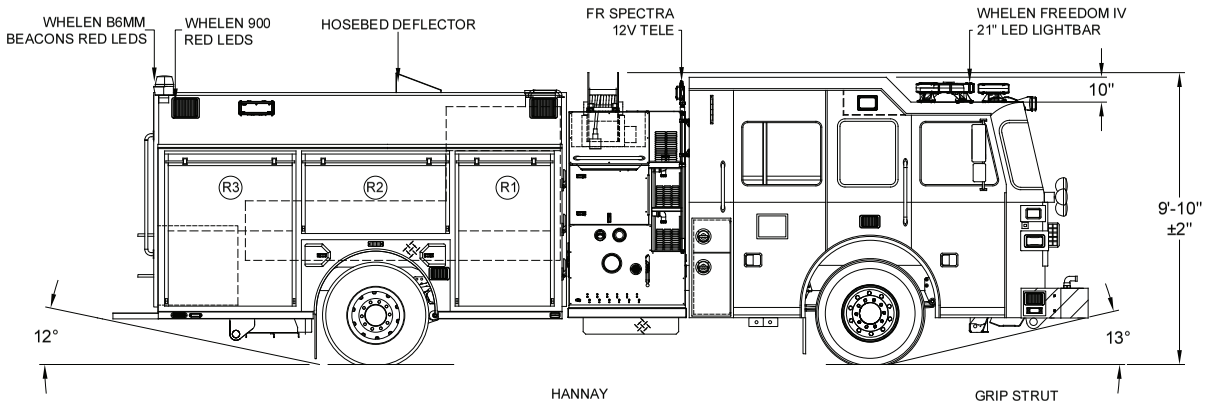

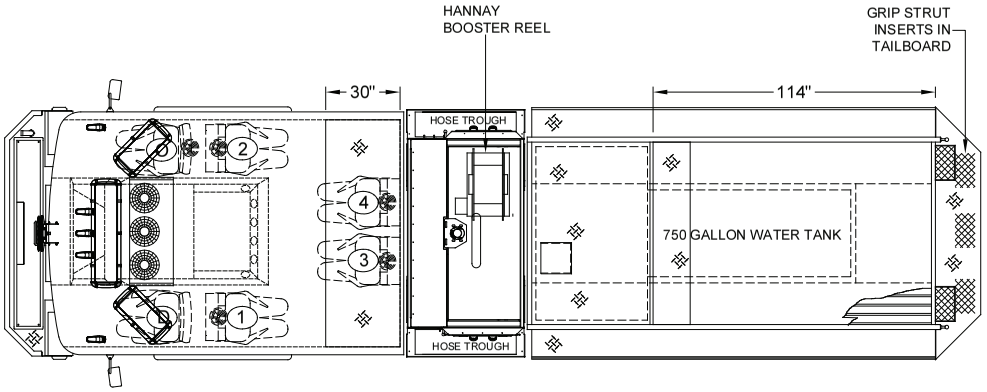

LEFT SIDE COMPARTMENTS					
COMPT	DOORS	OPENING DIMENSIONS	INSIDE DIMENSIONS	VOLUME	
L1	ROLL-UP	37.5"w X 55.4"h	43.1"w X 66"h X 27.3"d	36.1 CU. FT.	(21"h X 10.5"d UPPER)
L2	ROLL-UP	57.5"w X 26.2"h	61.6"w X 36.8"h X 27.3"d	23.2 CU. FT.	(21"h X 10.5"d UPPER)
L3	ROLL-UP	50.5"w X 55.4"h	53.4"w X 66"h X 27.3"d	44.8 CU. FT.	(21"h X 10.5"d UPPER)

RIGHT SIDE COMPARTMENTS					
COMPT	DOORS	OPENING DIMENSIONS	INSIDE DIMENSIONS	VOLUME	
R1	ROLL-UP	37.5"w X 55.4"h	43.1"w X 66"h X 27.3"d	31.1 CU. FT.	(33"h X 10.5"d UPPER)
R2	ROLL-UP	57.5"w X 26.2"h	61.6"w X 36.8"h X 10.5"d	13.8 CU. FT.	
R3	ROLL-UP	50.5"w X 55.4"h	53.4"w X 66"h X 27.3"d	38.6 CU. FT.	(33"h X 10.5"d UPPER)

REAR STEP COMPARTMENT				
COMPT	DOORS	OPENING DIMENSIONS	INSIDE DIMENSIONS	VOLUME
A1	DOUBLE	37"w X 24.6"h	32"h X 40"w X 31"d	22.9 CU. FT.
			TOTAL:	210.5 CU.FT.

TWO TONE CAB & BODY
PAINT BREAK OPTION #3
BLACK OVER RED

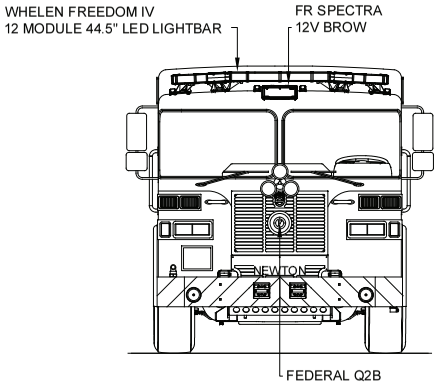

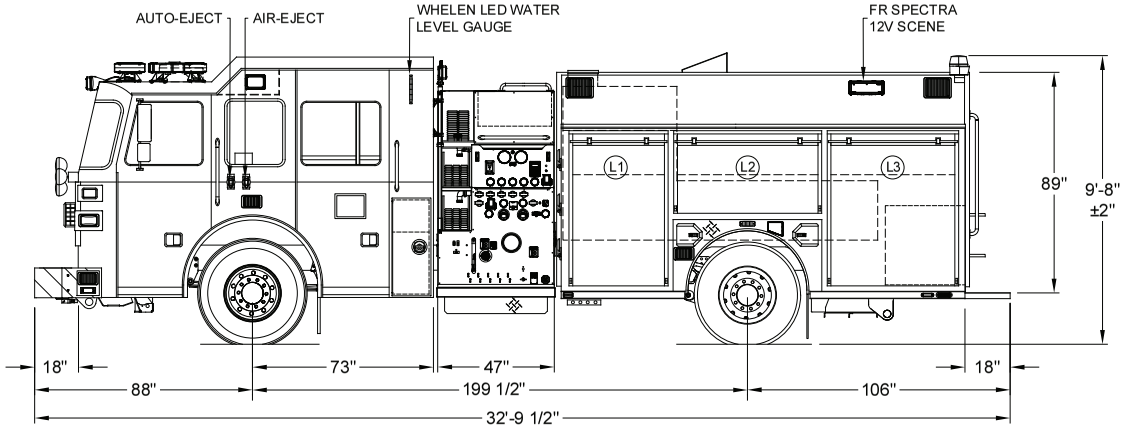

DIMENSIONS SHOWN ON THIS DRAWING ARE APPROXIMATE AND ARE SUBJECT TO MINOR DEVIATIONS DURING CONSTRUCTION.

IN THE EVENT OF A DISCREPANCY BETWEEN THE SUTPHEN SPECIFICATIONS AND DRAWING, THE SUTPHEN SPECIFICATIONS SHALL PREVAIL.

DRAWING IS FOR REFERENCE ONLY. SOME ITEMS PROPOSED MAY NOT BE SHOWN OR NOTED.

CUSTOMER APPROVAL

NAME: _____

TITLE: _____

DATE: _____

REV.	DESCRIPTION	BY	DATE
G	POST PRODUCTION SHOP ORDER REVISION	TF	05/20/2022
F	UPDATED AUTO-EJECT COVER OPENING ANGLE	TF	04/14/2022
E	UPDATED CROSSLAY COVER SETUP	TF	04/12/2022
D	HOSE BED LIGHTS HAVE CHANGED TO WHELEN 2G	TF	09/13/2021

DRAWN BY: T.FAHOUM

DATE: 12/28/2020

MFG. FACILITY: DUBLIN

SUTPHEN

NEWTON COUNTY FIRE DEPARTMENT
COVINGTON, GA

CUSTOM PUMPER - PA-12 BODY

DWG. NO.: HS-6984