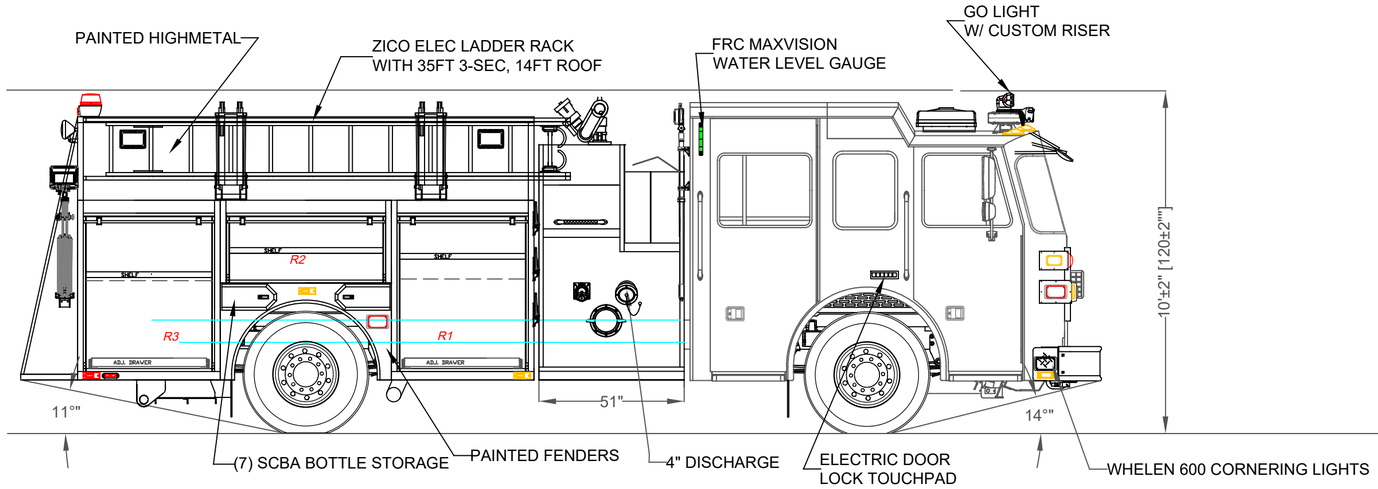

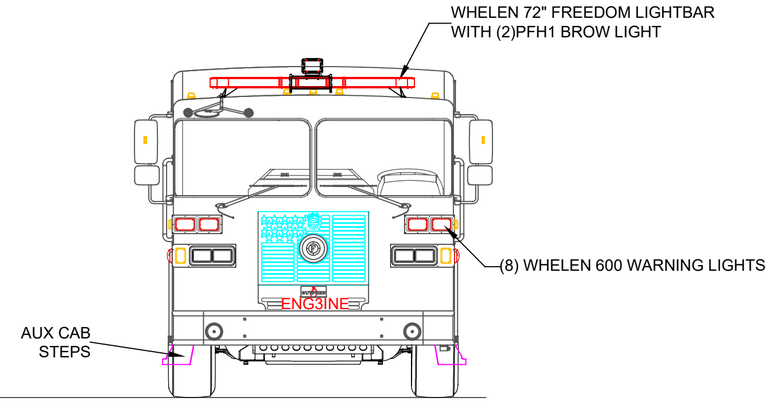

Left Side Compartmentation				
Compt	Doors	Opening Dimensions	Inside Dimensions	Volume
			WxHxD	
L1	Roll Up	43x61	50x71x24.25	49.8 CU FT
L2	Roll Up	53x30	60x40x24.25	33.7 CU FT
L3	Roll Up	43x61	50x71x24.25	49.8 CU FT
Right Side Compartmentation				
Compt	Doors	Opening Dimensions	Inside Dimensions	Volume
R1	Roll Up	43x49	50x59x24.25/10.25	31.9 CU FT
R2	Roll Up	53x18	60x28x10.25	10.0 CU FT
R3	Roll Up	43x49	50x59x24.25/10.25	31.9 CU FT
Rear Compartmentation				
Compt	Doors	Opening Dimensions	Inside Dimensions	Volume
A1	Roll Up	44x26	48x26x22.25	16.1 CU FT
Coffin Compartmentation				
Compt	Doors	Opening Dimensions	Inside Dimensions	Volume
			LxHxW	
LH	Hatch	(2) 64.5x22	160x17x26	43.4 CU FT

Total Volume
61.6 CU Ft

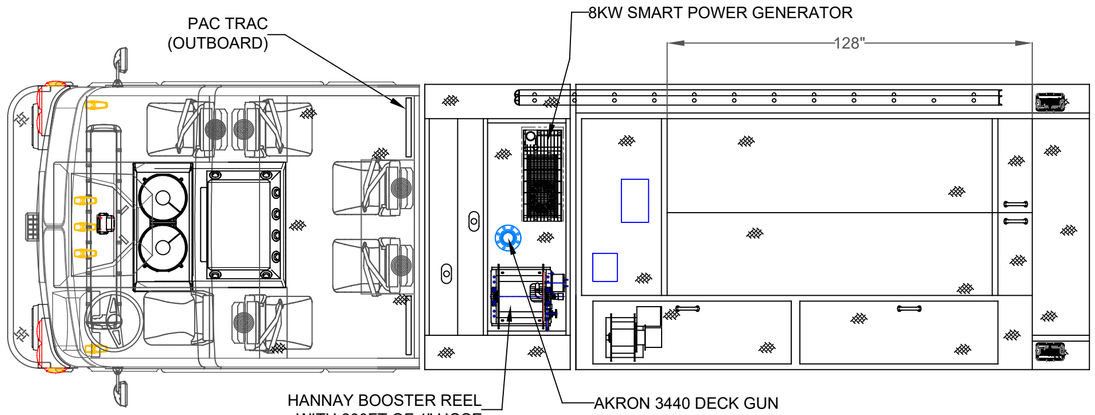

Hale Qmax 1500 single stage
Water Tank Capacity 1000 gal
Foam Tank Capacity 30 gal

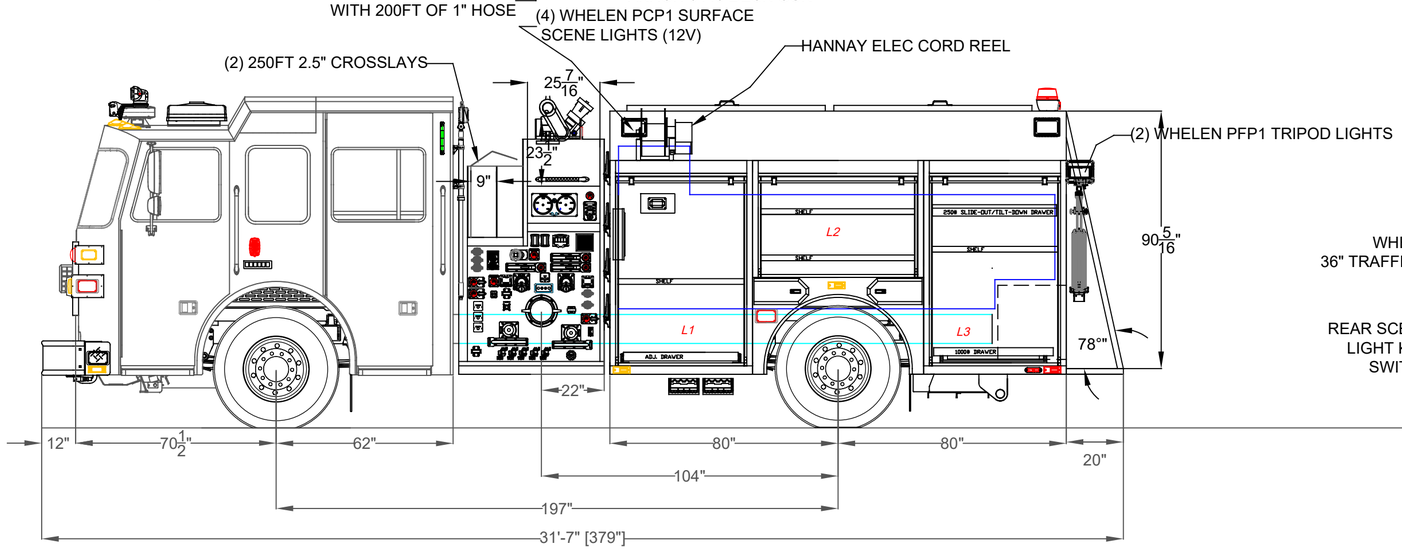

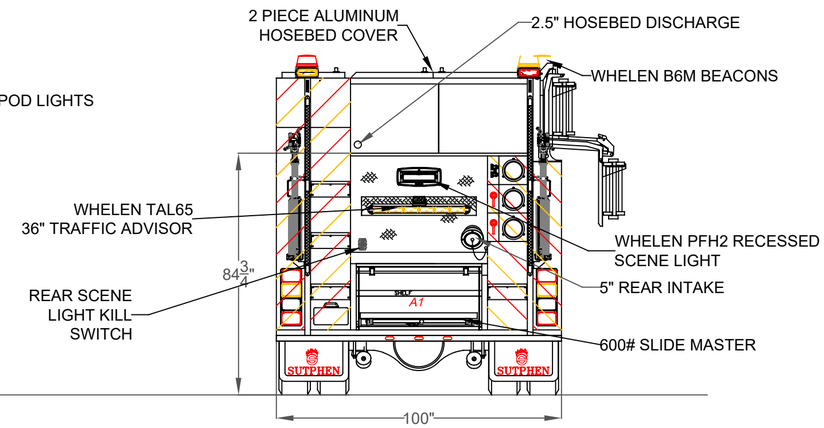

DIMENSIONS SHOWN ON THIS DRAWING ARE APPROXIMATE AND ARE SUBJECT TO MINOR DEVIATIONS DURING CONSTRUCTION.

IN THE EVENT OF A DISCREPANCY BETWEEN THE SUTPHEN SPECIFICATIONS AND DRAWING, THE SUTPHEN SPECIFICATIONS SHALL PREVAIL.

DRAWING IS FOR REFERENCE ONLY. SOME ITEMS PROPOSED MAY NOT BE SHOWN OR NOTED.

CUSTOMER APPROVAL

NAME: _____

TITLE: _____

DATE: _____

REV.	DESCRIPTION	BY	DATE
C	TOOL MOUNTING ADDED TO CAB	SED	10/8/21
B	CHANGES FROM MID INSPECTION	SED	10/8/21
A	CHANGES FROM PRE-CON	SED	2/23/21

THIS PRINT IS PROVIDED ON A RESTRICTED BASIS AND IS NOT TO BE USED IN ANY WAY DETRIMENTAL TO THE INTEREST OF SUTPHEN CORPORATION.

DRAWN BY: S.DORFMAN

DATE: 8/24/20

MFG. FACILITY: SUTPHEN EAST LAKE ARIEL,PA

SUTPHEN EAST
55 INNOVATION DRIVE
LAKE ARIEL, PA
1-844-776-2889

HARWINTON FIRE DEPT.
HARWINTON, CT

CUSTOM STAINLESS PUMPER

DWG. NO.: HS 6951