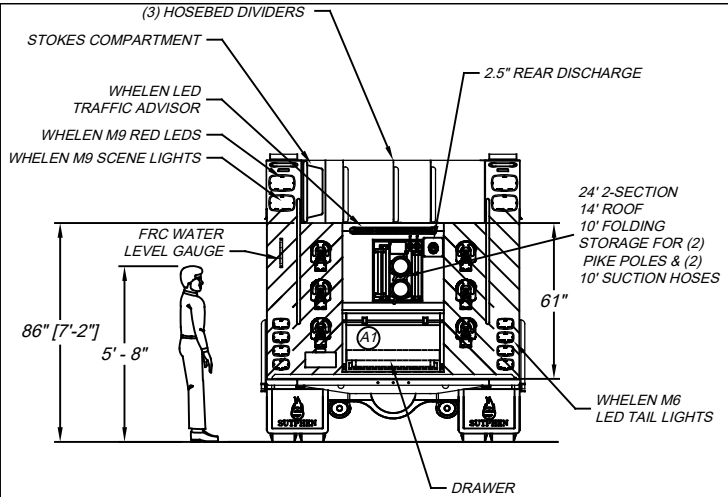


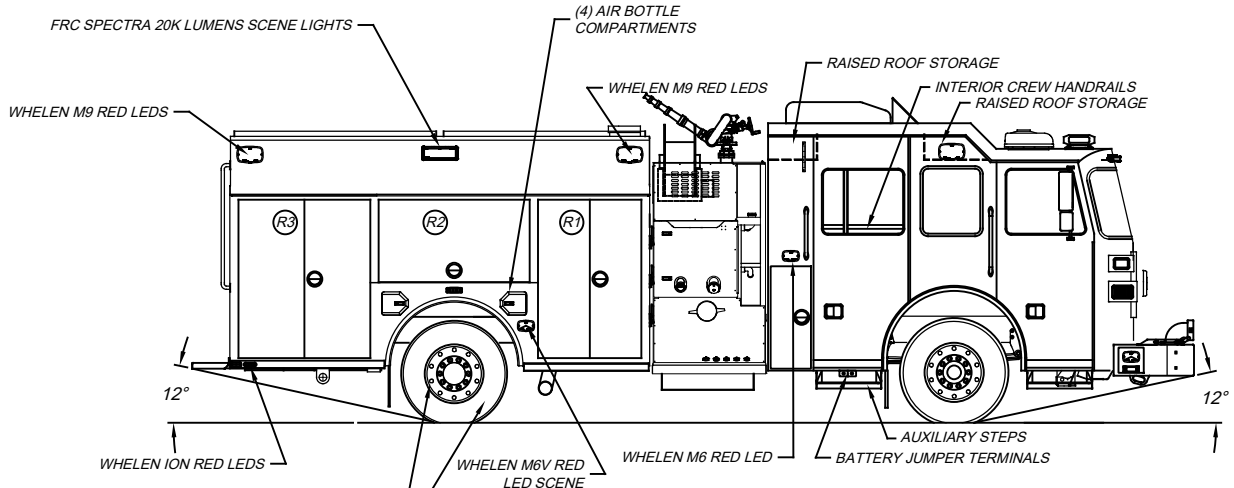


| LEFT SIDE COMPARTMENTATION | | | | |
|---|---|---|---|---|
| COMPT | DOORS | INSIDE DIMENSIONS | DOOR OPENING DIMENSIONS | VOLUME |
| | | | | |
| L1 | DOUBLE | 40"W X 66"H X 26"D | | 37.4 CU. FT. |
| L2 | LIFT-UP | 59"W X 31 1/2"H X 26"D | | 28.4 CU. FT. |
| L3 | DOUBLE | 51 1/2"W X 66"H X 26"D | | 47.4 CU. FT. |
| L4/L5 | LIFT-UP | 82"W X 13.5"H X 19"D | 75"W X 9.5"H | 24 CU. FT. |

| RIGHT SIDE COMPARTMENTATION | | | | |
|---|---|---|---|---|
| COMPT | DOORS | INSIDE DIMENSIONS | DOOR OPENING DIMENSIONS | VOLUME |
| | | | | |
| R1 | DOUBLE | 40"W X 66"H X 26"D | | 37.4 CU. FT. |
| R2 | LIFT-UP | 59"W X 31 1/2"H X 26"D | | 28.4 CU. FT. |
| R3 | DOUBLE | 51 1/2"W X 66"H X 26"D | | 47.4 CU. FT. |
| L4/L5 | LIFT-UP | 82"W X 13.5"H X 19"D | 75"W X 9.5"H | 24 CU. FT. |

| REAR STEP COMPARTMENT | | | | |
|---|---|---|---|---|
| COMPT | DOORS | INSIDE DIMENSIONS | DOOR OPENING DIMENSIONS | VOLUME |
| | | | | |
| A1 | ROLL-UP | 39 1/2"W X 28"H X 31"D | 36 3/4"W X 19"H | 19.8 CU. FT. |

BASE STORAGE: 246 CU. FT.
TOTAL STORAGE: 294 CU. FT.

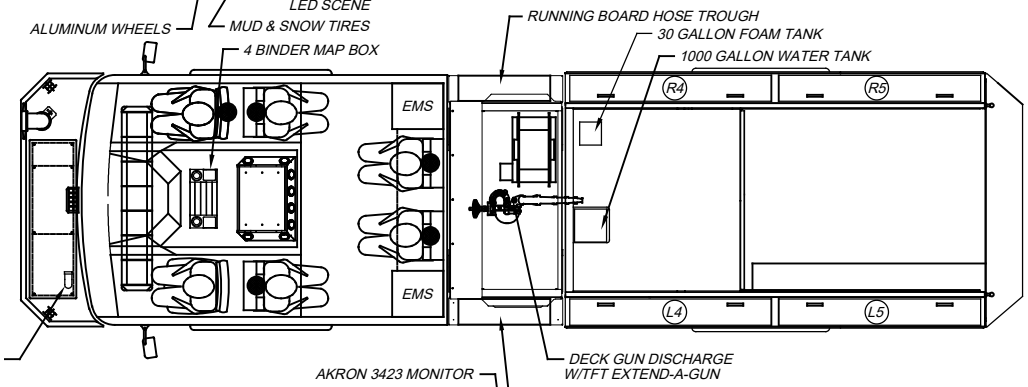


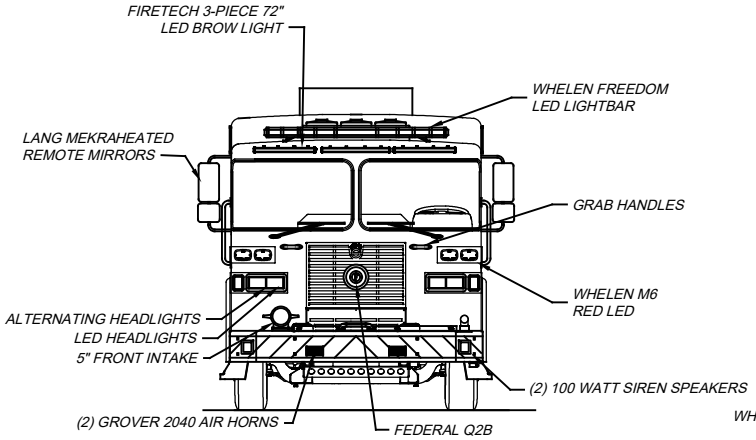


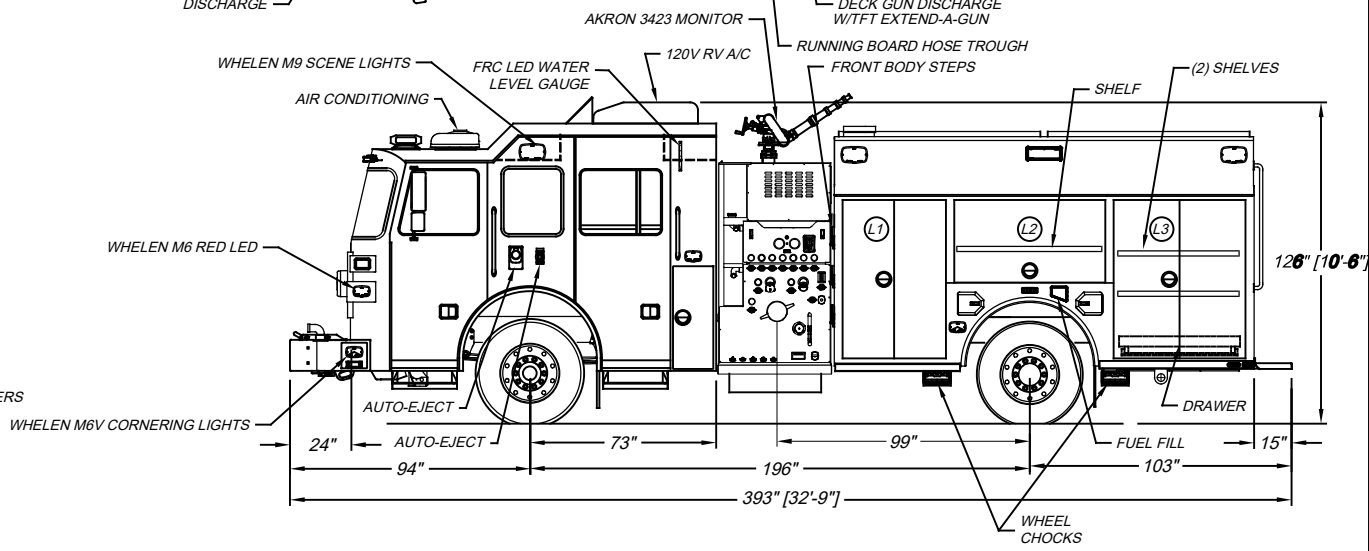


DIMENSIONS SHOWN ON THIS DRAWING ARE APPROXIMATE AND ARE SUBJECT TO MINOR DEVIATIONS DURING CONSTRUCTION.

IN THE EVENT OF A DISCREPANCY BETWEEN THE SUTPHEN SPECIFICATIONS AND DRAWING, THE SUTPHEN SPECIFICATIONS SHALL PREVAIL.

DRAWING IS FOR REFERENCE ONLY. SOME ITEMS PROPOSED MAY NOT BE SHOWN OR NOTED.

CUSTOMER APPROVAL

NAME: _____

TITLE: _____

DATE: _____

| REV. | DESCRIPTION | BY | DATE |
|---|---|---|---|
| E | REVISED PER REV H OF SHOP ORDER | AA | 8/24/2020 |
| D | REVISED PER REV D OF SHOP ORDER | JNH | 5/7/2020 |
| | | | |
| A | REVISED PER REV B OF SHOP ORDER | JNH | 3/13/2020 |

DRAWN BY: J.HAULMAN

DATE: 12/19/2019

MFG. FACILITY: SPRINGFIELD

SUTPHEN

Pedernales Fire Department
Briarcliff, TX.

PROGRAM 1 CUSTOM PUMPER

DWG. NO.: HS-6618

THIS PRINT IS PROVIDED ON A RESTRICTED BASIS AND IS NOT TO BE USED IN ANY WAY DETRIMENTAL TO THE INTEREST OF SUTPHEN CORPORATION.