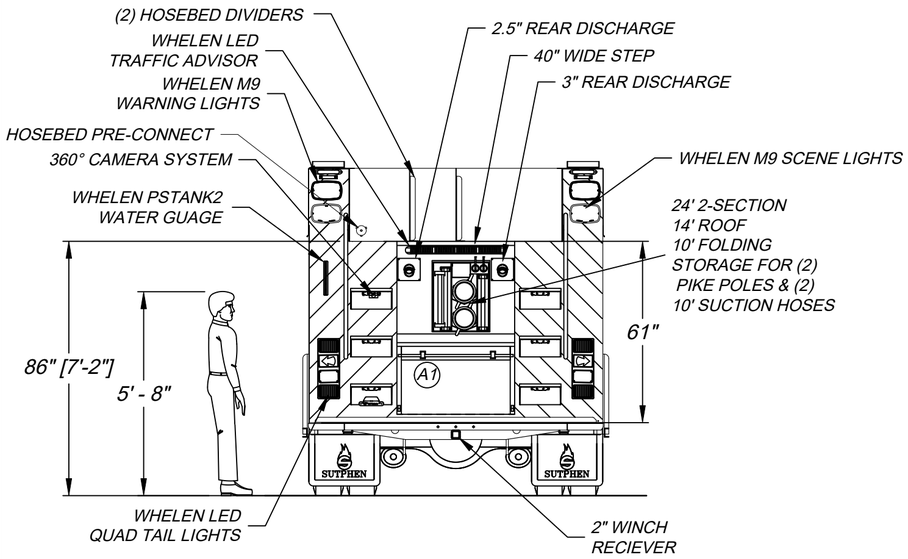


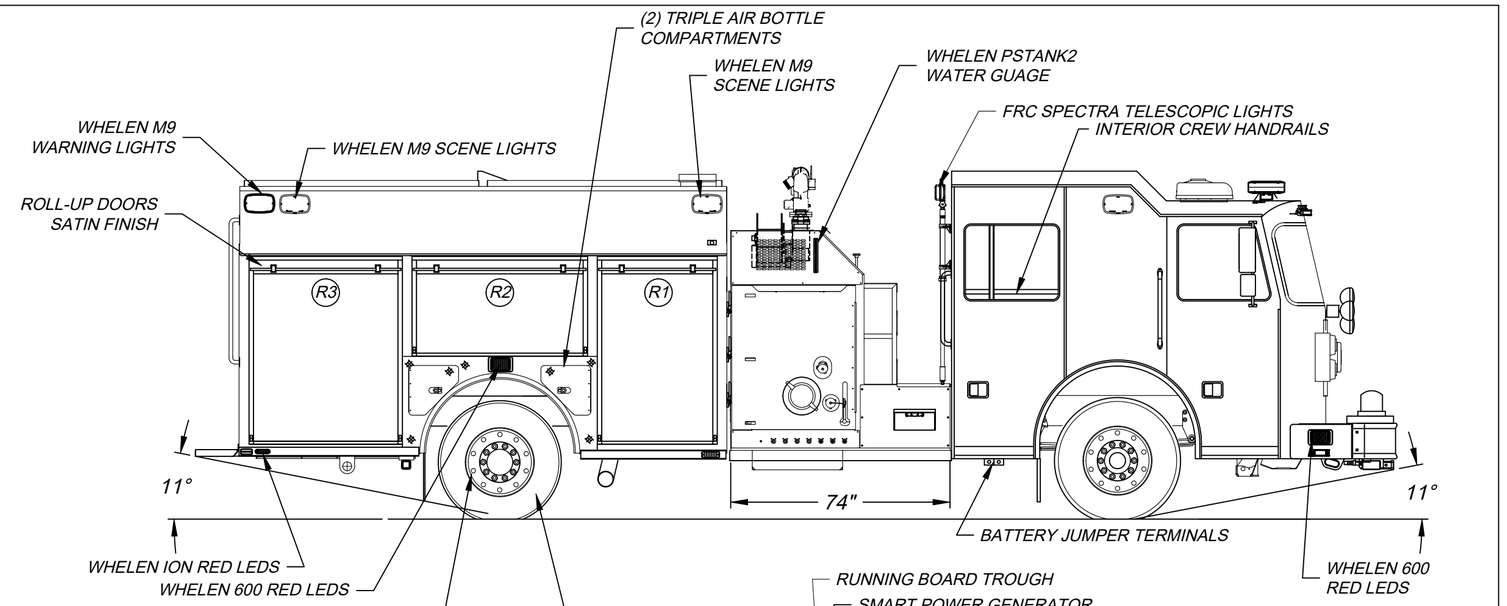


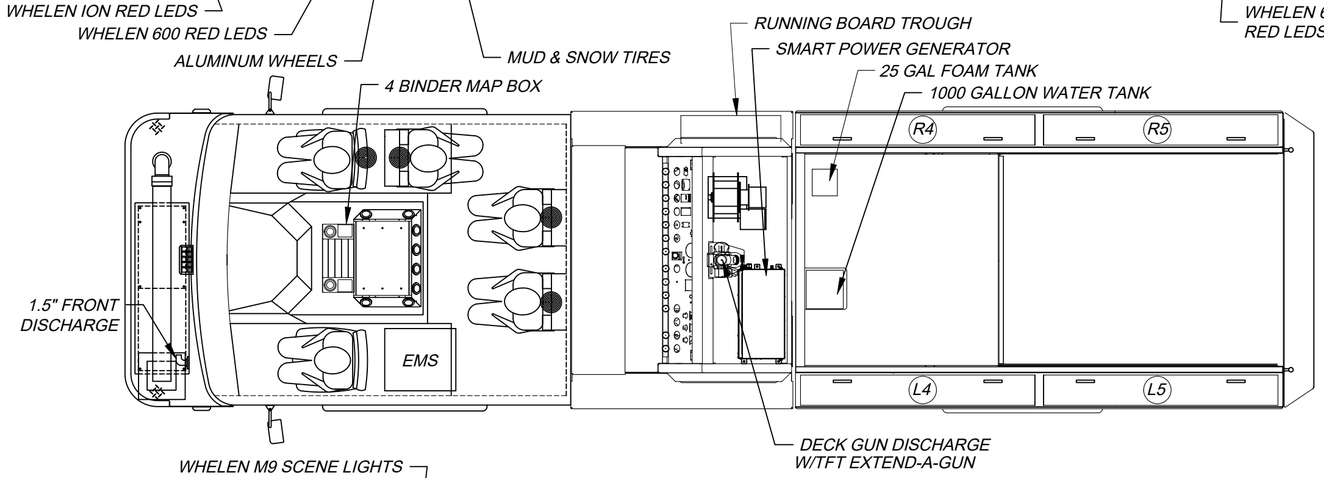


| LEFT SIDE COMPARTMENTATION | | | | |
|---|---|---|---|---|
| COMPT | DOORS | INSIDE DIMENSIONS | DOOR OPENING DIMENSIONS | VOLUME |
| | | | | |
| L1 | ROLL-UP | 40"W X 66"H X 26"D | 37 1/2"W X 56 1/2"H | 37.4 CU. FT. |
| L2 | ROLL-UP | 59"W X 31 1/2"H X 26"D | 56 1/4"W X 27"H | 28.4 CU. FT. |
| L3 | ROLL-UP | 51 1/2"W X 66"H X 26"D | 48 3/4"W X 56 1/2"H | 47.4 CU. FT. |
| L4/L5 | LIFT-UP | 82"W X 13.5"H X 19"D | 75"W X 9.5"H | 24 CU. FT. |

| RIGHT SIDE COMPARTMENTATION | | | | |
|---|---|---|---|---|
| COMPT | DOORS | INSIDE DIMENSIONS | DOOR OPENING DIMENSIONS | VOLUME |
| | | | | |
| R1 | ROLL-UP | 40"W X 66"H X 26"D | 37 1/2"W X 56 1/2"H | 37.4 CU. FT. |
| R2 | ROLL-UP | 59"W X 31 1/2"H X 26"D | 56 1/4"W X 27"H | 28.4 CU. FT. |
| R3 | ROLL-UP | 51 1/2"W X 66"H X 26"D | 48 3/4"W X 56 1/2"H | 47.4 CU. FT. |
| L4/L5 | LIFT-UP | 82"W X 13.5"H X 19"D | 75"W X 9.5"H | 24 CU. FT. |

| REAR STEP COMPARTMENT | | | | |
|---|---|---|---|---|
| COMPT | DOORS | INSIDE DIMENSIONS | DOOR OPENING DIMENSIONS | VOLUME |
| | | | | |
| A1 | ROLL-UP | 39 1/2"W X 28"H X 31"D | 36 3/4"W X 19"H | 19.8 CU. FT. |

BASE STORAGE: 246 CU. FT.
TOTAL STORAGE: 294 CU. FT.

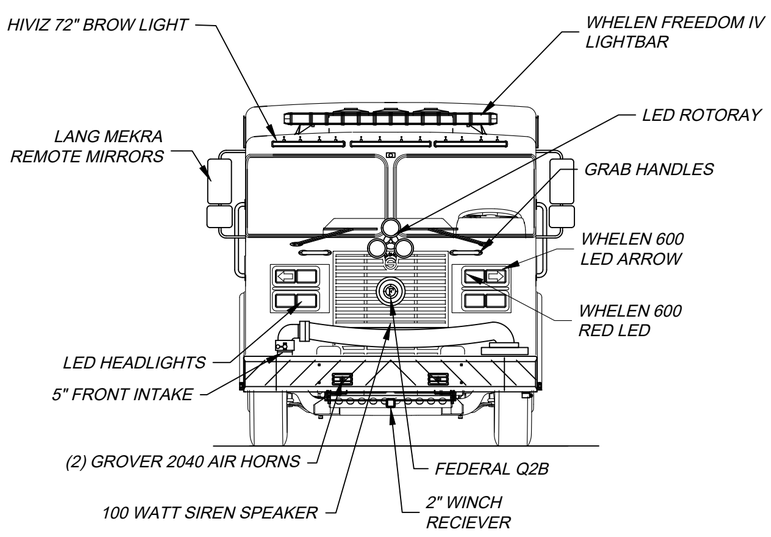


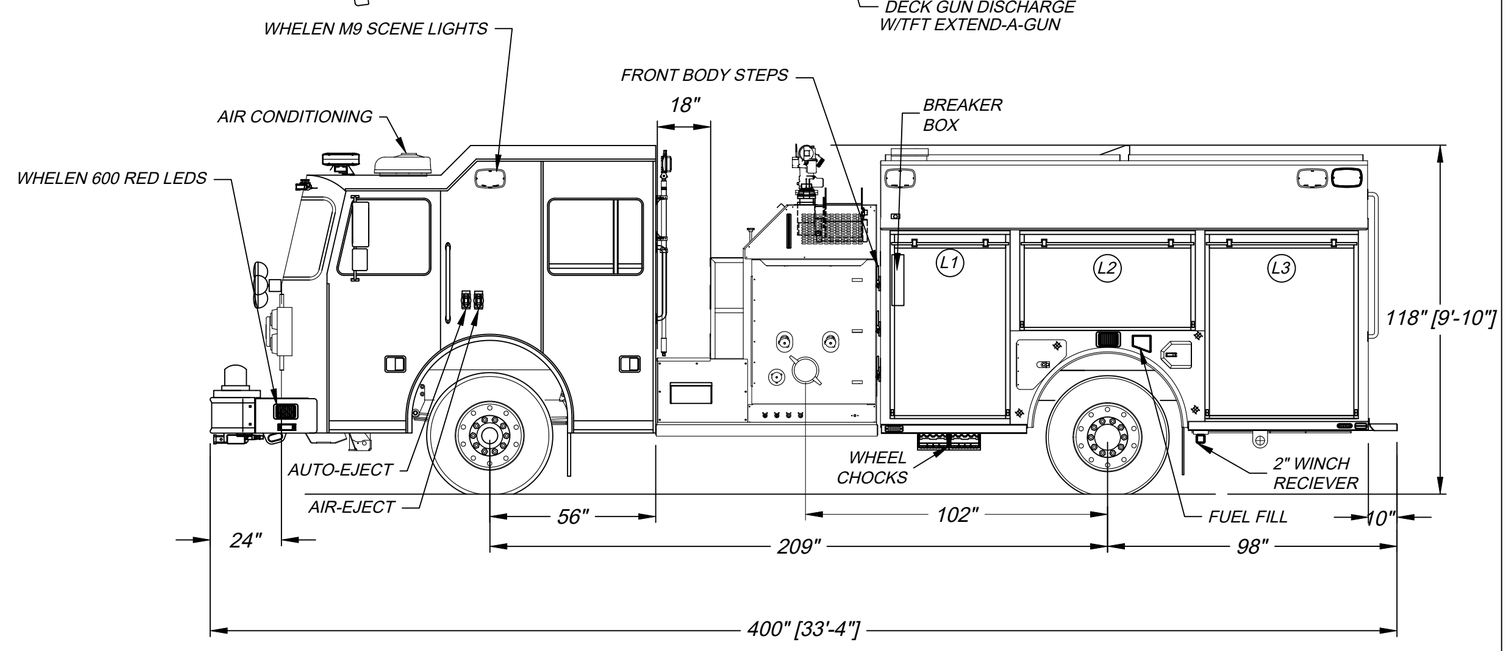


DIMENSIONS SHOWN ON THIS DRAWING ARE APPROXIMATE AND ARE SUBJECT TO MINOR DEVIATIONS DURING CONSTRUCTION.

IN THE EVENT OF A DISCREPANCY BETWEEN THE SUTPHEN SPECIFICATIONS AND DRAWING, THE SUTPHEN SPECIFICATIONS SHALL PREVAIL.

DRAWING IS FOR REFERENCE ONLY. SOME ITEMS PROPOSED MAY NOT BE SHOWN OR NOTED.

CUSTOMER APPROVAL

NAME:

TITLE:

DATE:

| REV. | DESCRIPTION | BY | DATE |
|---|---|---|---|
| A | Revised per Rev A of Shop Order | JNH | 2/1/2020 |

THIS PRINT IS PROVIDED ON A RESTRICTED BASIS AND IS NOT TO BE USED IN ANY WAY DETRIMENTAL TO THE INTEREST OF SUTPHEN CORPORATION.

DRAWN BY: V.HUBBARD

DATE: 9/20/2019

MFG. FACILITY: SPRINGFIELD

SUTPHEN

TURKEY CREEK FIRE TERRITORY
402 N. HUNTINGTON ST, SYRACUSE, IN

PROGRAM 1 CUSTOM PUMPER

DWG. NO.: HS-6602