COMPT	DOORS	OPENING DIMENSIONS	INSIDE DIMENSIONS	VOLUME
L1 LOWER	ROLL-UP	31.73"W x 15.00"H	38.23"W x 15.00"H x 16.82"D	5.57 CU. FT.
L1 UPPER	ROLL-UP	31.73"W x 20.93"H	38.23"W x 30.43"H x 20.00"D	13.46 CU. FT.
L2	ROLL-UP	31.47"W x 66.31"H	37.97"W x 75.81"H x 20.00"D	33.31 CU. FT.
L3	ROLL-UP	31.35"W x 20.80"H	37.85"W x 30.30"H x 16.04"D	10.64 CU. FT.
R1 LOWER	ROLL-UP	31.25"W x 15.00"H	37.75"W x 15.00"H x 16.81"D	5.50 CU. FT.
R1 UPPER	ROLL-UP	31.25"W x 20.92"H	37.75"W x 30.42"H x 20.00"D	13.29 CU. FT.
R2	ROLL-UP	36.22"W x 66.30"H	42.72"W x 75.8"H x 20.00"D	37.47 CU. FT.

COMPT	DOORS	OPENING DIMENSIONS	INSIDE DIMENSIONS	VOLUME
R3	ROLL-UP	38.38"W x 35.92"H	44.88"W x 45.42"H x 20.00"D	23.59 CU. FT.
R4	ROLL-UP	57.35"W x 26.67"H	63.85"W x 36.17"H x 20.00"D	26.72 CU. FT.
R5	ROLL-UP	26.60"W x 57.05"H	33.10"W x 66.55"H x 20.00"D	25.49 CU. FT.
R6 UPPER	ROLL-UP	29.34"W x 11.67"H	45.84"W x 21.17"H x 20.00"D	11.23 CU. FT.
R6 LOWER	ROLL-UP	29.34"W x 15"H	45.84"W x 15.00"H x 16.81"D	6.68 CU. FT.
R7	HINGED	9.00"W x 26.38"H	14.93"W x 30.31"H x 16.82"D	4.40 CU. FT.
			TOTAL VOLUME	217.35 CU. FT.

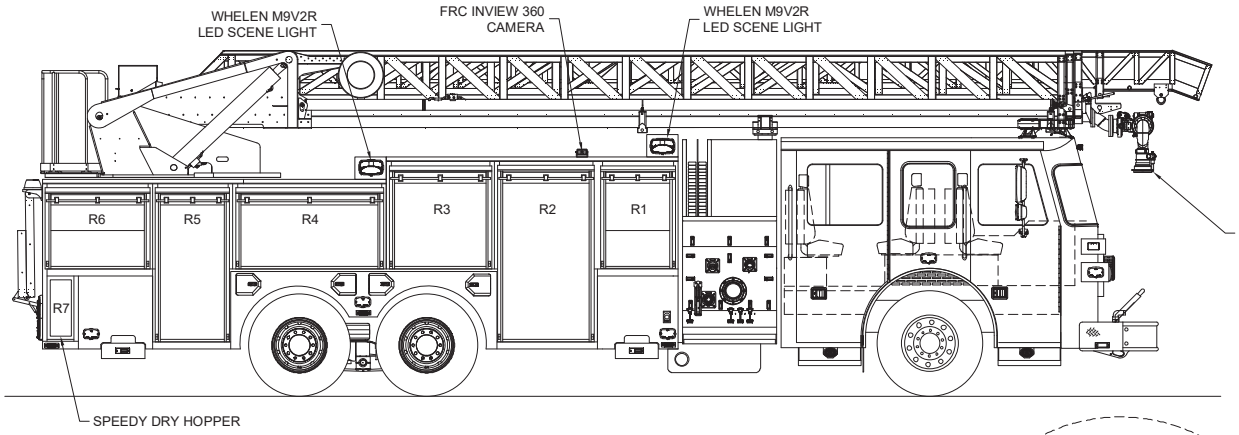

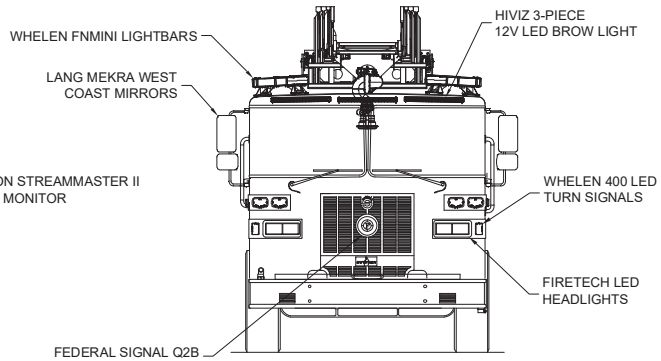

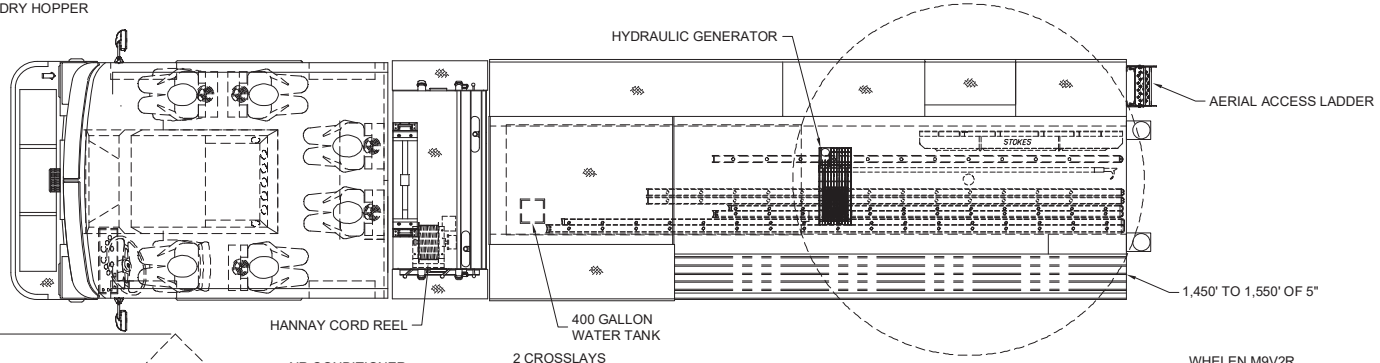

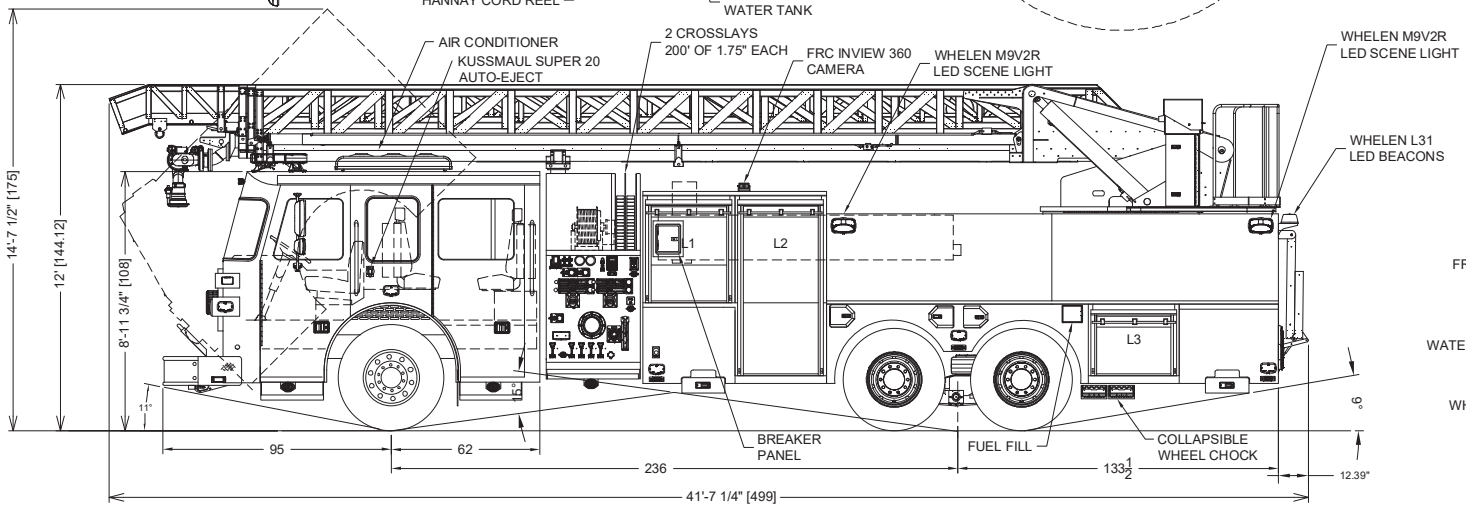

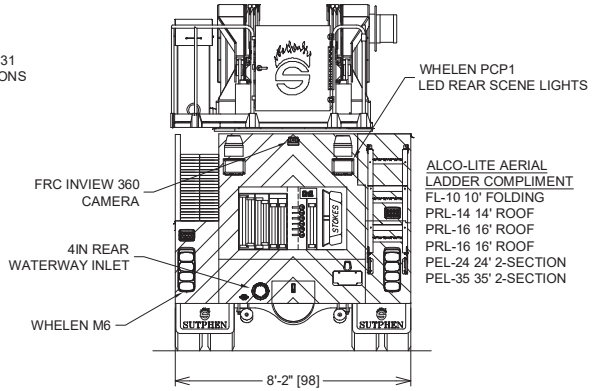

ALCO-LITE AERIAL
LADDER COMPLIMENT
FL-10 10' FOLDING
PRL-14 14' ROOF
PRL-16 16' ROOF
PRL-16 16' ROOF
PEL-24 24' 2-SECTION
PEL-35 35' 2-SECTION

DIMENSIONS SHOWN ON THIS DRAWING ARE APPROXIMATE AND ARE SUBJECT TO MINOR DEVIATIONS DURING CONSTRUCTION.

IN THE EVENT OF A DISCREPANCY BETWEEN THE SUTPHEN SPECIFICATIONS AND DRAWING, THE SUTPHEN SPECIFICATIONS SHALL PREVAIL.

DRAWING IS FOR REFERENCE ONLY. SOME ITEMS PROPOSED MAY NOT BE SHOWN OR NOTED.

CUSTOMER APPROVAL

NAME:

TITLE:

DATE:

REV.	DESCRIPTION	BY	DATE
-	-	-	-

THIS PRINT IS PROVIDED ON A RESTRICTED BASIS AND IS NOT TO BE USED IN ANY WAY DETRIMENTAL TO THE INTEREST OF SUTPHEN CORPORATION.

DRAWN BY: APF

DATE: 9/20/2019

MFG. FACILITY: HILLIARD

SUTPHEN

SUTPHEN
DEMO 470
SLR108

DWG. NO.: HS-6579