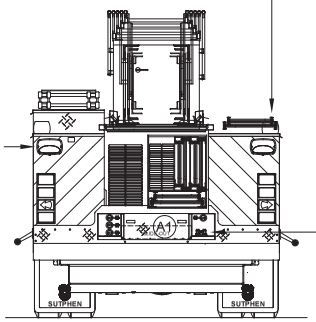

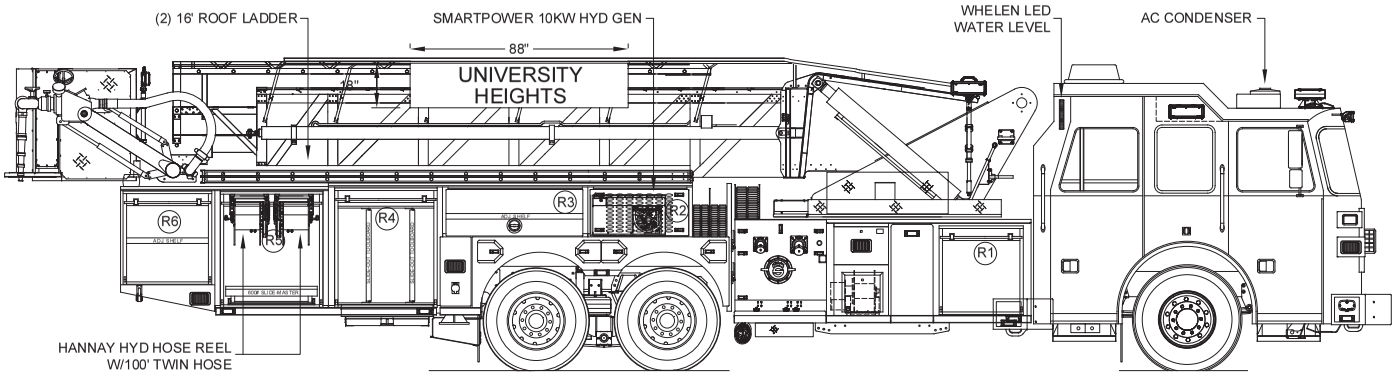

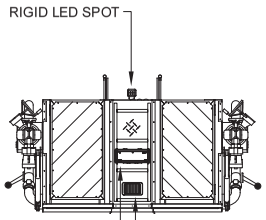

TWO-TONE CAB PAINT
PAINT BREAK OPTION #1
BLACK OVER RED

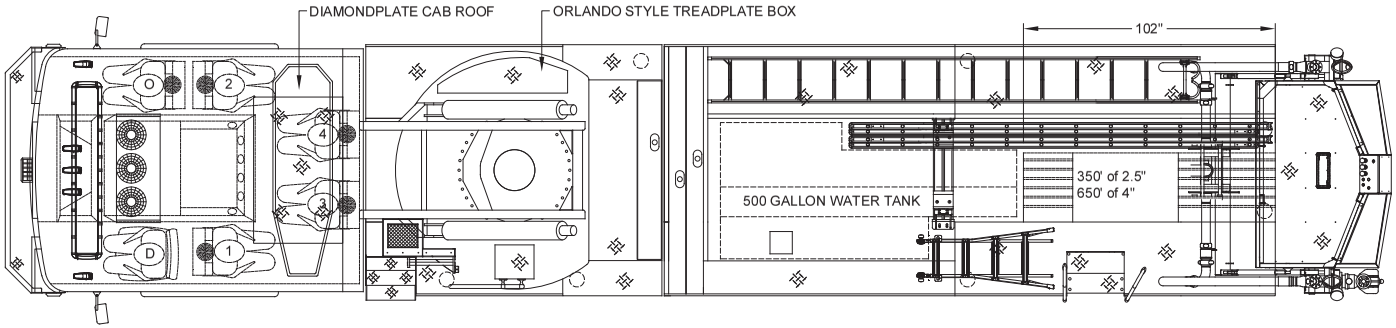

10'7" MAX HEIGHT

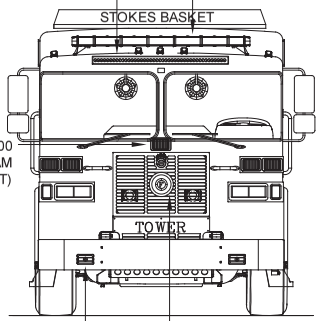

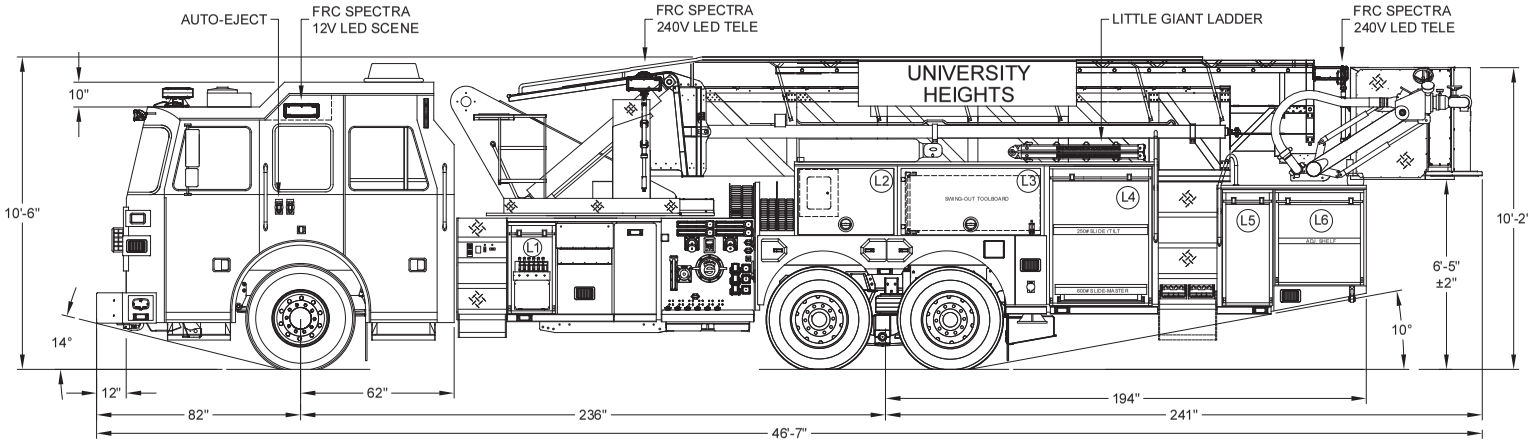

DOOR OPENINGS			COMPARTMENT DIMENSIONS		
COMPT.	HEIGHT	WIDTH	HEIGHT	WIDTH	DEPTH
L1	31 13/16	13 7/16	38 1/2	20 5/16	19 7/8
L2	23	33 1/4	27 1/2	41 1/2	12 1/8
L3	23	50 1/4	27 1/2	58	12 1/8
L4	48 1/2	38 3/4	56 1/2	45 3/4	26 1/2
L5	39	15 1/8	47	22	26 1/2
L6	31	30 7/8	39	34 3/4	26 1/2

DOOR OPENINGS			COMPARTMENT DIMENSIONS		
COMPT.	HEIGHT	WIDTH	HEIGHT	WIDTH	DEPTH
R1	31 13/16	33 7/16	38 1/2	40	27 1/2
R2	15	33 1/4	19 1/2	41 1/2	26 1/2
R3	15	50 1/4	19 1/2	58	26 1/2
R4	40 1/2	38 3/4	48 1/2	45 3/4	26 1/2
R5	39	38 3/4	47	45 3/4	26 1/2
R6	31	30 7/8	39	34 3/4	26 1/2

DOOR OPENINGS			COMPARTMENT DIMENSIONS		
COMPT.	HEIGHT	WIDTH	HEIGHT	WIDTH	DEPTH
A1	9 1/8	24 1/2	9 7/8	26	88

TOTAL COMPARTMENT VOLUME - 244.07 CU.FT.

DIMENSIONS SHOWN ON THIS DRAWING ARE APPROXIMATE AND ARE SUBJECT TO MINOR DEVIATIONS DURING CONSTRUCTION.

IN THE EVENT OF A DISCREPANCY BETWEEN THE SUTPHEN SPECIFICATIONS AND DRAWING, THE SUTPHEN SPECIFICATIONS SHALL PREVAIL.

DRAWING IS FOR REFERENCE ONLY. SOME ITEMS PROPOSED MAY NOT BE SHOWN OR NOTED.

CUSTOMER APPROVAL

NAME: _____

TITLE: _____

DATE: _____

REV.	DESCRIPTION	BY	DATE
M	POST-PRODUCTION REVISION TO REFLECT FINAL PRODUCT	RM	02/19/20
L	BOOM SIGNS REDUCED TO 18" HEIGHT ; ONLY (1) 6' PIKE POLE CAN BE MOUNTED IN BOOM	RM	01/06/20
K	BREATHING AIR TANK MOVED TO DRIVER'S SIDE BOOM PER PRODUCTION REQUEST	RM	01/02/20
J	BLACK-OUT OPTIONS CLARIFIED FURTHER (RAPTOR IN PLACE OF DURABAK, CAN'T DO BLACK WARNING TAG BEZELS)	RM	12/11/19

THIS PRINT IS PROVIDED ON A RESTRICTED BASIS AND IS NOT TO BE USED IN ANY WAY DETRIMENTAL TO THE INTEREST OF SUTPHEN CORPORATION.

DRAWN BY: R.MILLER

DATE: 03/06/19

MFG. FACILITY: DUBLIN

SUTPHEN

UNIVERSITY HEIGHTS FIRE DEPARTMENT
UNIVERSITY HEIGHTS, OH

SPH100 AERIAL PLATFORM

DWG. NO.: HS-6460