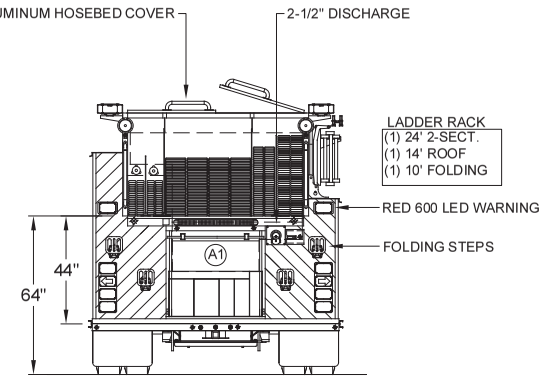

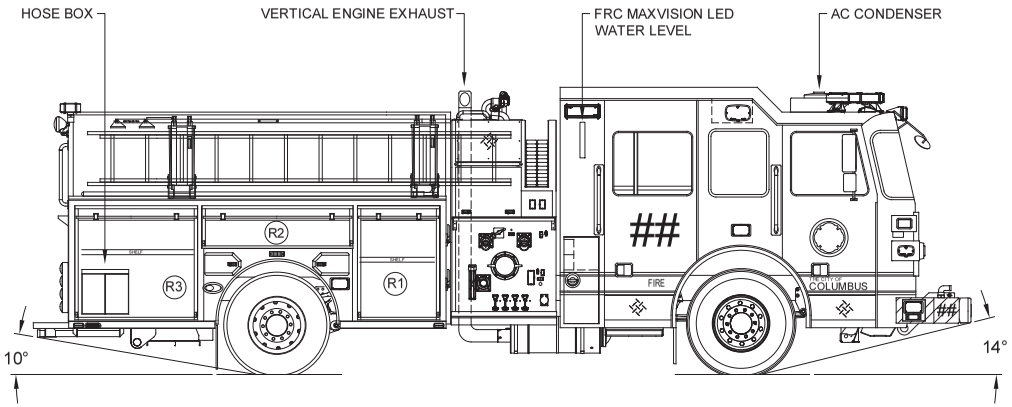

LEFT SIDE COMPARTMENTS				
COMPT	DOORS	OPENING DIMENSIONS	INSIDE DIMENSIONS	VOLUME
L1	ROLL UP	29"w X 56h	36 1/2"w X 66"h X 27 1/4"d (12"d upper)	35.6 CU. FT.
L2	ROLL UP	58 1/2"w X 27 1/4"h	62"w X 35 7/8"h X 12"d	15.4 CU. FT.
L3	ROLL UP	44"w X 56"h	48"w X 66"h X 27 1/4"d (12"d upper)	39 CU. FT.
P1	LIFT UP	44"w X 56"h	23"w X 15 3/4"h X 30"d	6.2 CU. FT.

RIGHT SIDE COMPARTMENTS				
COMPT	DOORS	OPENING DIMENSIONS	INSIDE DIMENSIONS	VOLUME
R1	ROLL UP	29"w X 39 1/2"h	36 1/2"w X 50 1/2"h X 27 1/4"d	29 CU. FT.
R2	ROLL UP	58 1/2"w X 12"h	62"w X 20 1/4"h X 12"d	8.7 CU. FT.
R3	ROLL UP	44"w X 39 1/2"h	48"w X 50 1/2"h X 27 1/4"d (12"d upper)	29.75 CU. FT.

REAR STEP COMPARTMENTS				
COMPT	DOORS	OPENING DIMENSIONS	INSIDE DIMENSIONS	VOLUME
A1	ROLL-UP	37 1/2"w X 31"h	40"h X 40"w X 27 1/2"d	23 CU. FT.

TOTAL STORAGE: 186.6 CU.FT.

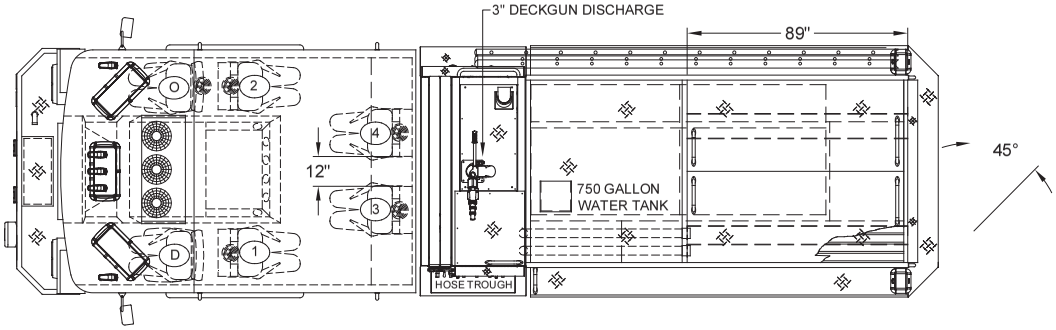

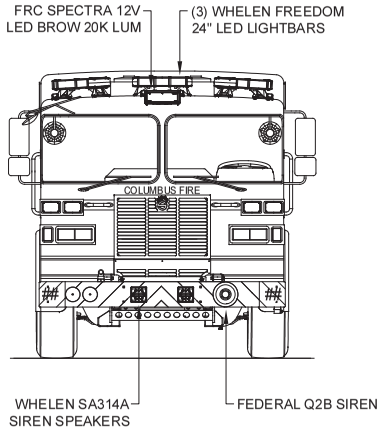

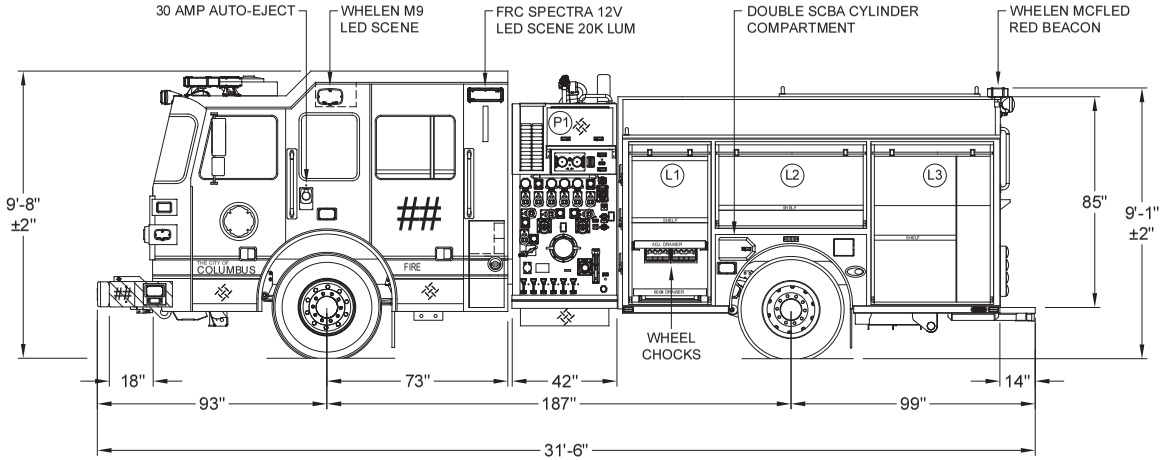

HS #	UNIT #
6355	10
6356	12
6357	13
6358	20
6359	26

DIMENSIONS SHOWN ON THIS DRAWING ARE APPROXIMATE AND ARE SUBJECT TO MINOR DEVIATIONS DURING CONSTRUCTION.

IN THE EVENT OF A DISCREPANCY BETWEEN THE SUTPHEN SPECIFICATIONS AND DRAWING, THE SUTPHEN SPECIFICATIONS SHALL PREVAIL.

DRAWING IS FOR REFERENCE ONLY. SOME ITEMS PROPOSED MAY NOT BE SHOWN OR NOTED.

CUSTOMER APPROVAL

NAME:

TITLE:

DATE:

REV.	DESCRIPTION	BY	DATE
D	SMALL CORRECTIONS / CLARIFICATIONS - SEE SO CHANGE SUMMARY ON SHARED	RM	06/20/19
C	MULTIPLE UPDATES - SEE SHOP ORDER CHANGE SUMMARY	RM	03/21/19
B	SEVERAL CLARIFICATIONS AND (1) ADDITION ; SEE SO REVISION EMAIL FOR FULL LIST	RM	11/06/18
A	REV-A SHOP ORDER	RM	08/30/18

DRAWN BY: R.MILLER

DATE: 12/02/16

MFG. FACILITY: DUBLIN

SUTPHEN

CITY OF COLUMBUS DIVISION OF FIRE
COLUMBUS, OH

CUSTOM PUMPER - PS-08 BODY

DWG. NO.: HS-6355-59