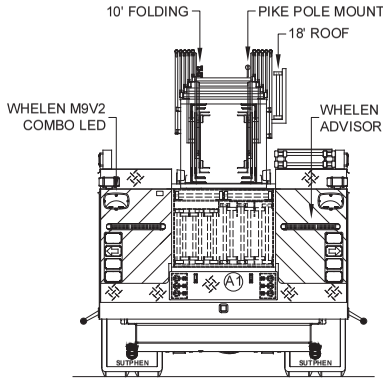

LADDER CHUTE
(2) X 16' ROOF
(3) X 24' 2-SECT.
(2) X 28' 2-SECT.
(1) X 35' 2-SECT.

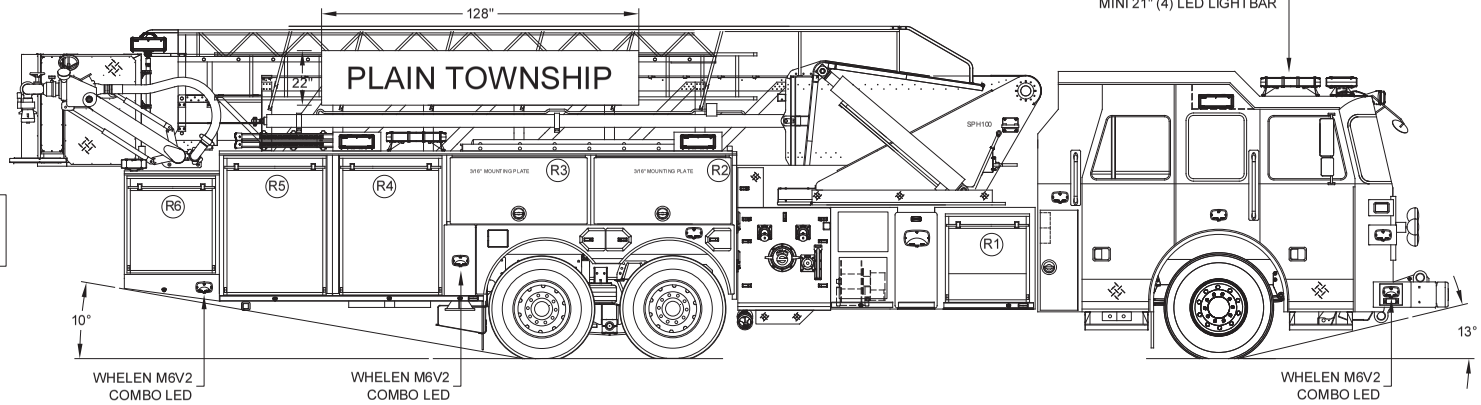

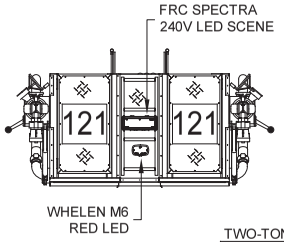

TWO-TONE CAB
PAINT BREAK OPTION #1
BLACK OVER RED

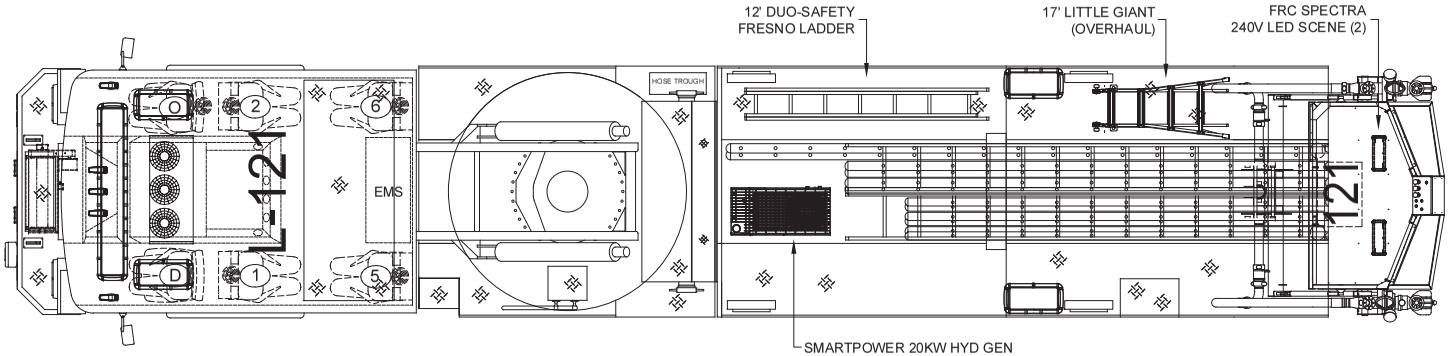

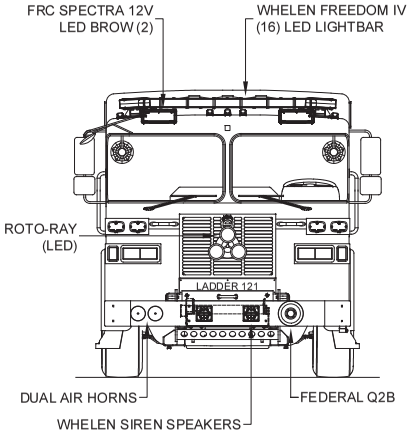

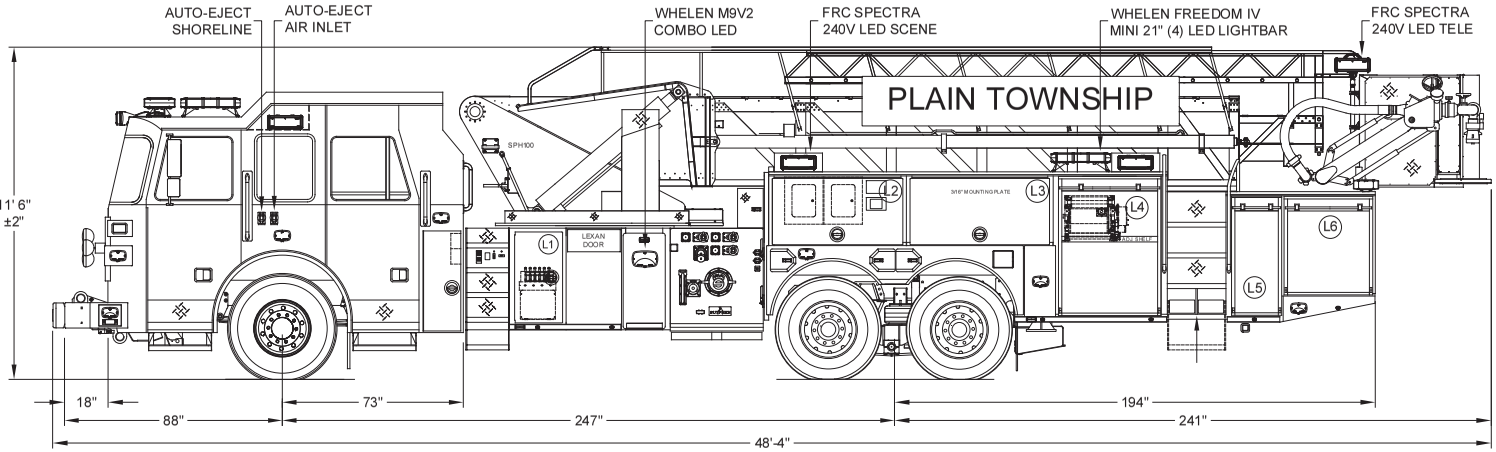

DOOR OPENINGS / COMPARTMENT DIMENSIONS

COMPT.	HEIGHT	WIDTH	HEIGHT	WIDTH	DEPTH
L1	31 1/2	13 1/2	38 1/2	20 1/4	20 1/4
L2	23	50 1/4	27 1/2	58	26 1/2
L3	23	50 1/4	27 1/2	58	26 1/2
L4	48 1/2	38 3/4	56 1/2	45 3/4	26 1/2
L5	40 1/2	15 1/8	56 1/2	22	26 1/2
L6	32 1/8	30 7/8	40 1/8	34 3/4	26 1/2

DOOR OPENINGS / COMPARTMENT DIMENSIONS

COMPT.	HEIGHT	WIDTH	HEIGHT	WIDTH	DEPTH
R1	31 1/2	33 1/2	38 1/2	40	27 1/2
R2	23	**50 3/4**	27 1/2	**58**	**26 1/2**
R3	23	50 3/4	27 1/2	58	26 1/2
R4	48 1/2	38 3/4	56 1/2	45 3/4	26 1/2
R5	48 1/2	38 3/4	56 1/2	45 3/4	26 1/2
R6	32 1/8	30 7/8	40 1/8	34 3/4	26 1/2

DOOR OPENINGS / COMPARTMENT DIMENSIONS

COMPT.	HEIGHT	WIDTH	HEIGHT	WIDTH	DEPTH
A1	9 1/8	24 1/2	9 7/8	26	88

DIMENSIONS SHOWN ON THIS DRAWING ARE APPROXIMATE AND ARE SUBJECT TO MINOR DEVIATIONS DURING CONSTRUCTION.

IN THE EVENT OF A DISCREPANCY BETWEEN THE SUTPHEN SPECIFICATIONS AND DRAWING, THE SUTPHEN SPECIFICATIONS SHALL PREVAIL.

DRAWING IS FOR REFERENCE ONLY. SOME ITEMS PROPOSED MAY NOT BE SHOWN OR NOTED.

CUSTOMER APPROVAL

NAME: _____

TITLE: _____

DATE: _____

REV.	DESCRIPTION	BY	DATE
D	SEVERAL CLARIFICATIONS - SEE SO REVISION EMAIL FOR FULL LIST	RM	02/15/19
C	(3) CLARIFICATIONS - SEE SO REVISION EMAIL FOR FULL LIST	RM	11/20/18
B	CLARIFIED MODEL # FOR REAR TIRES ; AIR CAB PUMP SHIFT REQUESTED	RM	11/09/18
A	REV-A SHOP ORDER	RM	10/05/18

THIS PRINT IS PROVIDED ON A RESTRICTED BASIS AND IS NOT TO BE USED IN ANY WAY DETRIMENTAL TO THE INTEREST OF SUTPHEN CORPORATION.

DRAWN BY: R.MILLER

DATE: 08/30/18

MFG. FACILITY: DUBLIN

SUTPHEN

PLAIN TOWNSHIP FIRE DEPARTMENT
NEW ALBANY, OH

SPH100 AERIAL PLATFORM

DWG. NO.: HS-6352