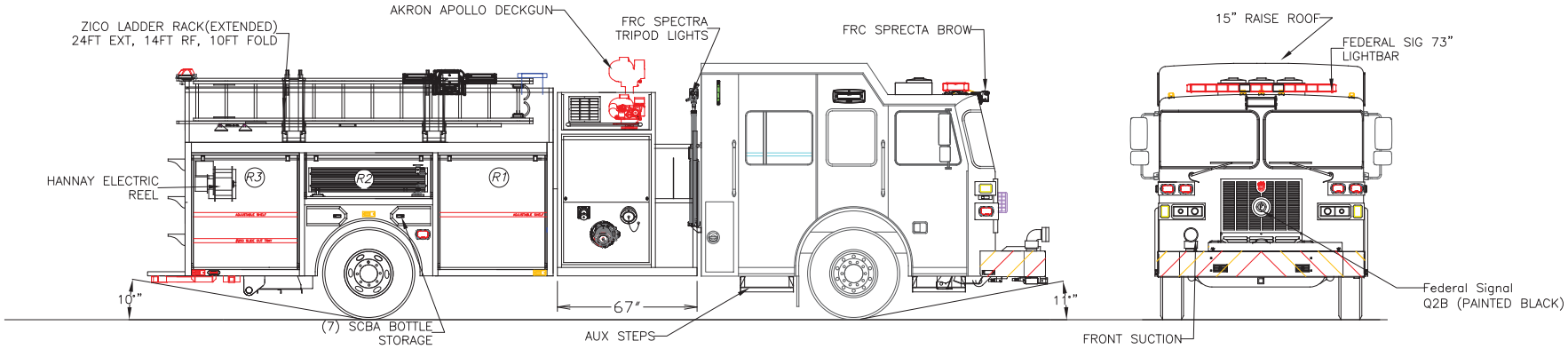

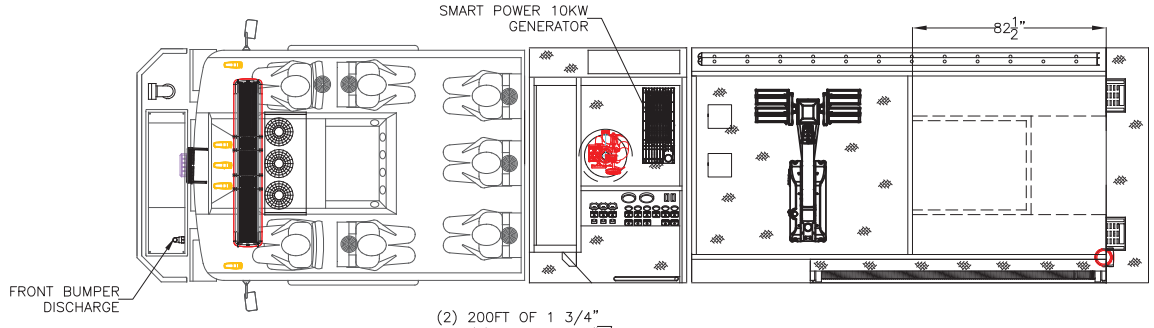

LEFT SIDE COMPARTMENTATION				
COMPT	DOORS	OPENING DIMENSIONS	INSIDE DIMENSIONS	VOLUME
L1	ROLL-UP	50"w X 56 7/8"h	56 1/2"w X 66"h X 27 1/4"d	58 CU. FT.
L2	ROLL-UP	57"w X 21"h	61 1/2"w X 32"h X 27 1/4"d	35 CU. FT.
L3	ROLL-UP	50"w X 56 7/8"h	53 1/2"w X 66"h X 27 1/4"d	55 CU. FT.

RIGHT SIDE COMPARTMENTATION				
COMPT	DOORS	OPENING DIMENSIONS	INSIDE DIMENSIONS	
R1	ROLL-UP	50"w X 50 7/8"h	56 1/2"w X 60"h X 27 1/4"d	53 CU. FT.
R2	ROLL-UP	57"w X 16"h	61 1/2"w X 26"h X 27 1/4"d	29 CU. FT.
R3	ROLL-UP	50"w X 50 7/8"h	53 1/2"w X 60"h X 27 1/4"d	50 CU. FT.

REAR STEP COMPARTMENTS				
COMPT	DOORS	OPENING DIMENSIONS	INSIDE DIMENSIONS	
A1	ROLL-UP	27 1/2"w X 31"h	30"h X 40"w X 30 1/4"d	21 CU. FT.

TOTAL STORAGE: 301 CU.FT.

HALE QMAX 2000 GPM PUMP
1000 GALLONS OF WATER/ 50 GALLONS OF FOAM

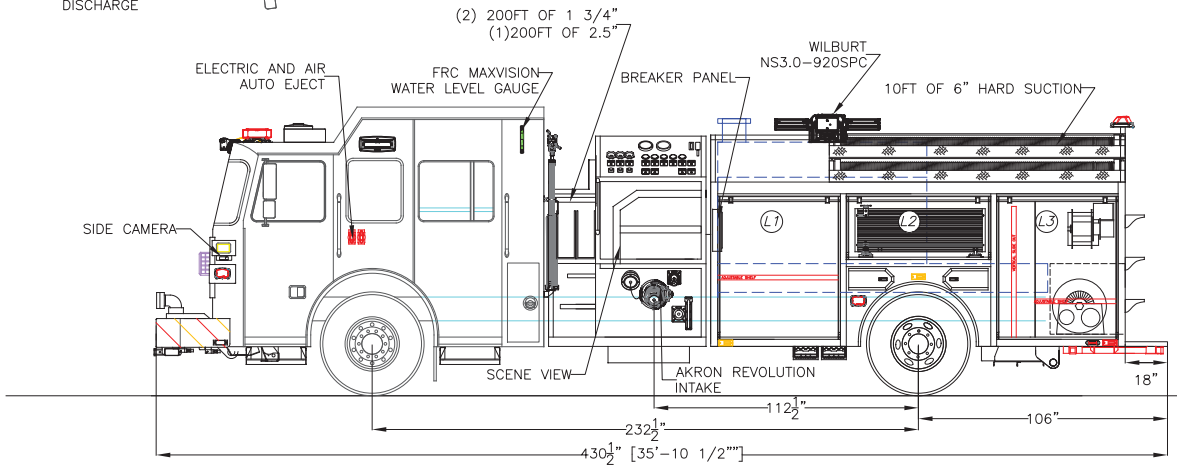

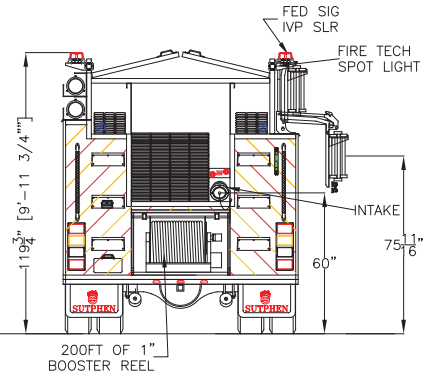

DIMENSIONS SHOWN ON THIS DRAWING ARE APPROXIMATE AND ARE SUBJECT TO MINOR DEVIATIONS DURING CONSTRUCTION.

IN THE EVENT OF A DISCREPANCY BETWEEN THE SUTPHEN SPECIFICATIONS AND DRAWING, THE SUTPHEN SPECIFICATIONS SHALL PREVAIL.

DRAWING IS FOR REFERENCE ONLY. SOME ITEMS PROPOSED MAY NOT BE SHOWN OR NOTED.

CUSTOMER APPROVAL

NAME:

TITLE:

DATE:

REV.	DESCRIPTION	BY	DATE
A	PRE-CON	SED	3/21/18

THIS PRINT IS PROVIDED ON A RESTRICTED BASIS AND IS NOT TO BE USED IN ANY WAY DETRIMENTAL TO THE INTEREST OF SUTPHEN CORPORATION.

DRAWN BY: S.DORFMAN

DATE: 1/24/2018

MFG. FACILITY: SUTPHEN EAST LAKE ARIEL,PA

WHITING FIRE COMPANY
WHITING,NJ

ALUMINUM PUMPER

DWG. NO.: HS 6224