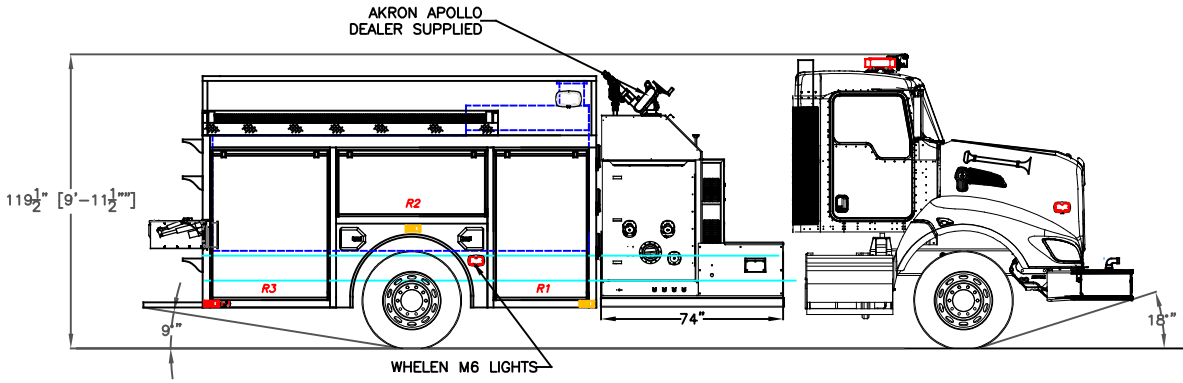

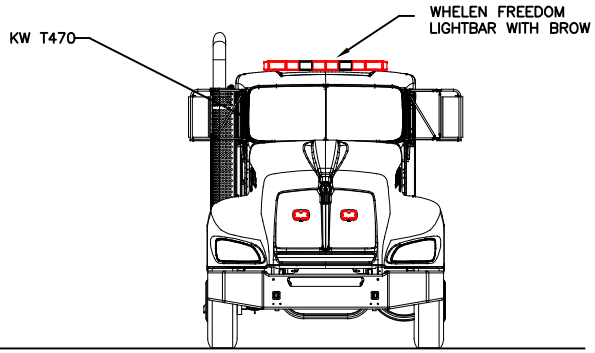

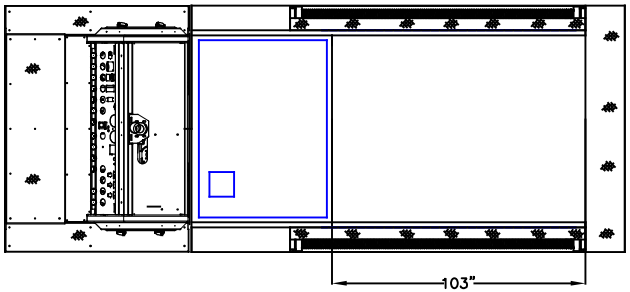

Left Side Compartmentation				
Compt	Doors	Opening Dimensions	Inside Dimensions	Volume
			WxHxD	
L1	Roll Up	36x56	43x66x10.25/27.25	31.2 CU FT
L2	Roll Up	56.5x22	63.5x32x10.25	12 CU FT
L3	Roll Up	46x56	53x66x10.25/27.25	38.5 CU FT

Right Side Compartmentation				
Compt	Doors	Opening Dimensions	Inside Dimensions	Volume
R1	Roll Up	36x56	43x66x10.25/27.25	31.2 CU FT
R2	Roll Up	56.5x22	63.5x32x10.25	12 CU FT
R3	Roll Up	46x56	53x66x10.25/27.25	38.5 CU FT

Total Volume
163.4 CU Ft

HALE QFLO 1250 SINGLE STAGE
WATER TANK CAPACITY: 1500 GAL.

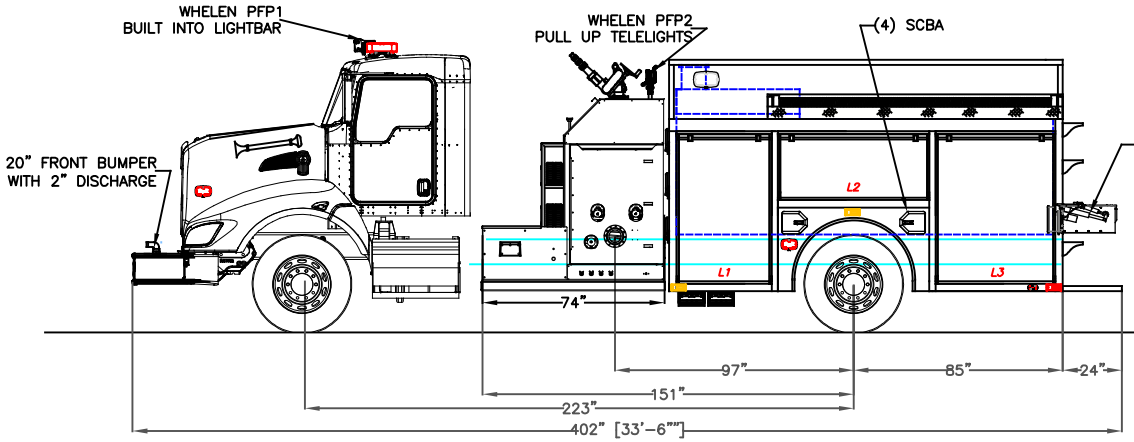

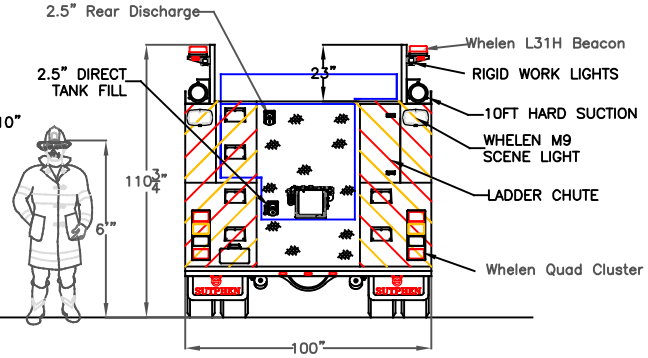

DIMENSIONS SHOWN ON THIS DRAWING ARE APPROXIMATE AND ARE SUBJECT TO MINOR DEVIATIONS DURING CONSTRUCTION.

IN THE EVENT OF A DISCREPANCY BETWEEN THE SUTPHEN SPECIFICATIONS AND DRAWING, THE SUTPHEN SPECIFICATIONS SHALL PREVAIL.

DRAWING IS FOR REFERENCE ONLY. SOME ITEMS PROPOSED MAY NOT BE SHOWN OR NOTED.

CUSTOMER APPROVAL

NAME:

TITLE:

DATE:

REV.	DESCRIPTION	BY	DATE

THIS PRINT IS PROVIDED ON A RESTRICTED BASIS AND IS NOT TO BE USED IN ANY WAY DETRIMENTAL TO THE INTEREST OF SUTPHEN CORPORATION.

DRAWN BY: S.DORFMAN

DATE: 08/15/17

MFG. FACILITY: SUTPHEN EAST LAKE ARIEL, PA

SUTPHEN EAST
55 INNOVATION DRIVE
LAKE ARIEL, PA 18436
P:1-844-776-2889

BEAUREGARD FIRE DISTRICT #3
DERIDDER, LA 70634

COMMERICAL PUMPER

DWG. NO.: HS 6186-6187