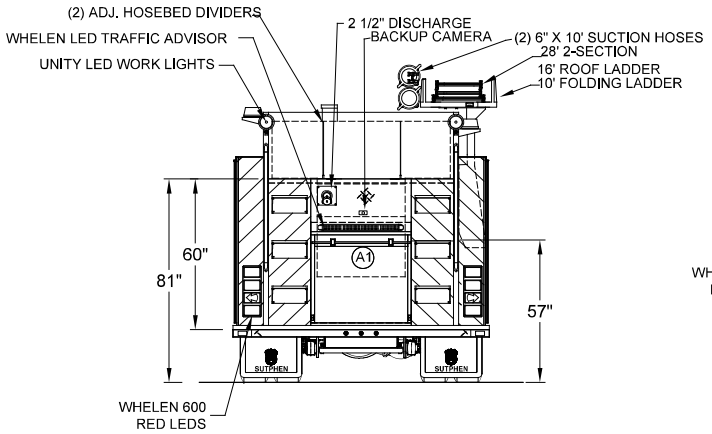

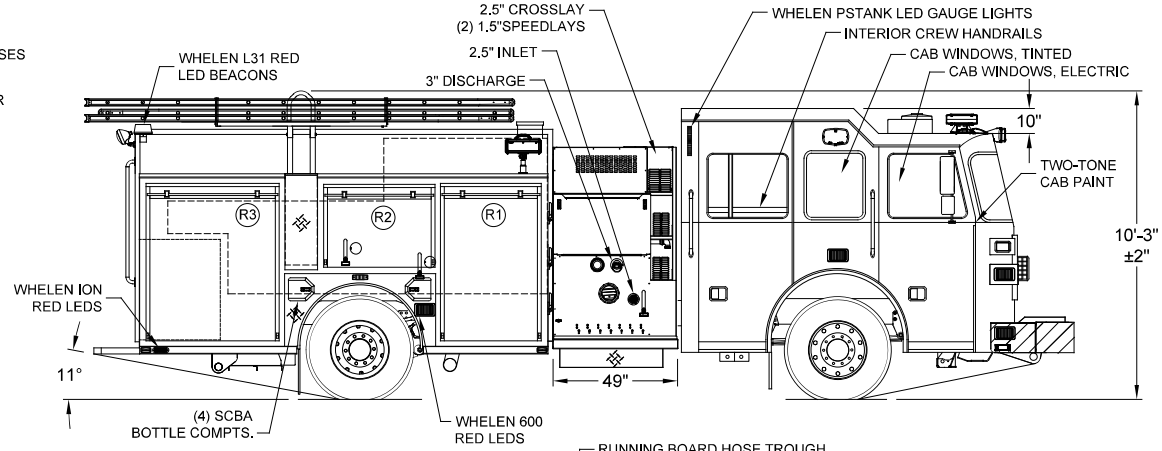

LEFT SIDE COMPARTMENTS				
COMPT	DOORS	OPENING DIMENSIONS	INSIDE DIMENSIONS	VOLUME
L1	ROLL-UP	37"w X 56 7/8"h	43"w X 66"h X 27 1/4"d	40 CU. FT.
L2	ROLL-UP	57"w X 27 5/8"h	61 1/2"w X 36 1/2"h X 27 1/4"d	30 CU. FT.
L3	ROLL-UP	50"w X 56 7/8"h	56"w X 66"h X 27 1/4"d	52 CU. FT.

RIGHT SIDE COMPARTMENTS				
COMPT	DOORS	OPENING DIMENSIONS	INSIDE DIMENSIONS	VOLUME
R1	ROLL-UP	37"w X 56 7/8"h	43"w X 66"h X 27 1/4"d	40 CU. FT.
R2	ROLL-UP	39 1/2""w X 27 5/8"h	44"w X 36 1/2"h X 27 1/4"d	25 CU. FT.
R3	ROLL-UP	50"w X 56 7/8"h	56"w X 66"h X 27 1/4"d	52 CU. FT.

REAR STEP COMPARTMENT				
COMPT	DOORS	OPENING DIMENSIONS	INSIDE DIMENSIONS	VOLUME
A1	ROLL-UP	37 1/2"w X 31"h	40"h X 40"w X 29 1/2"d	27 CU. FT.

TOTAL: 266 CU.FT

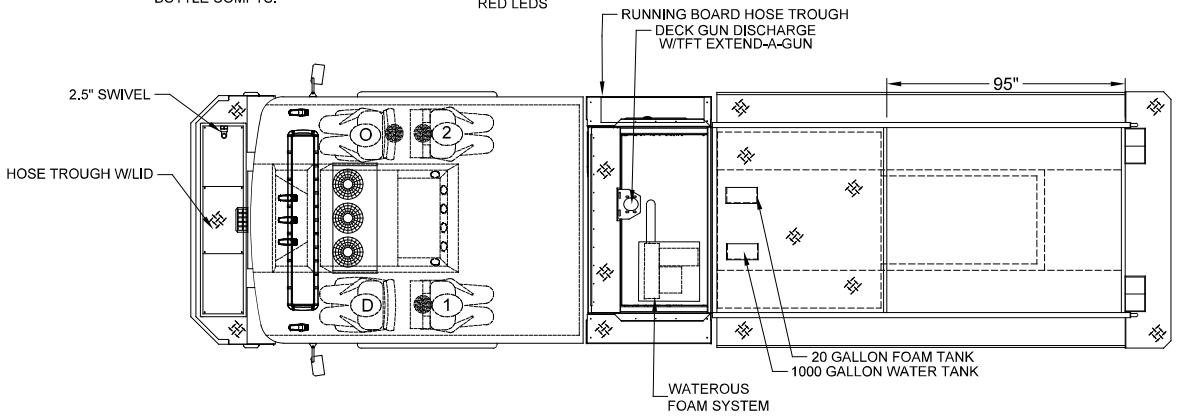

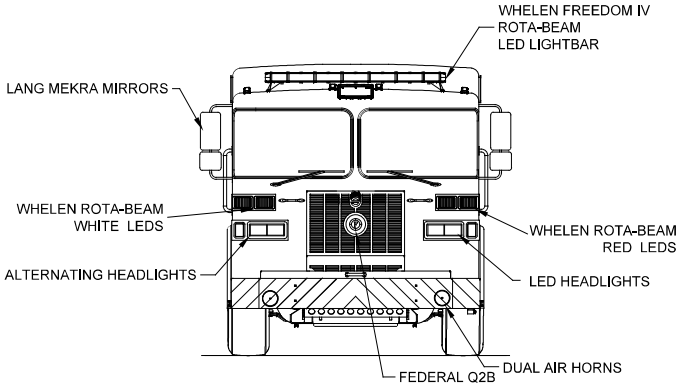

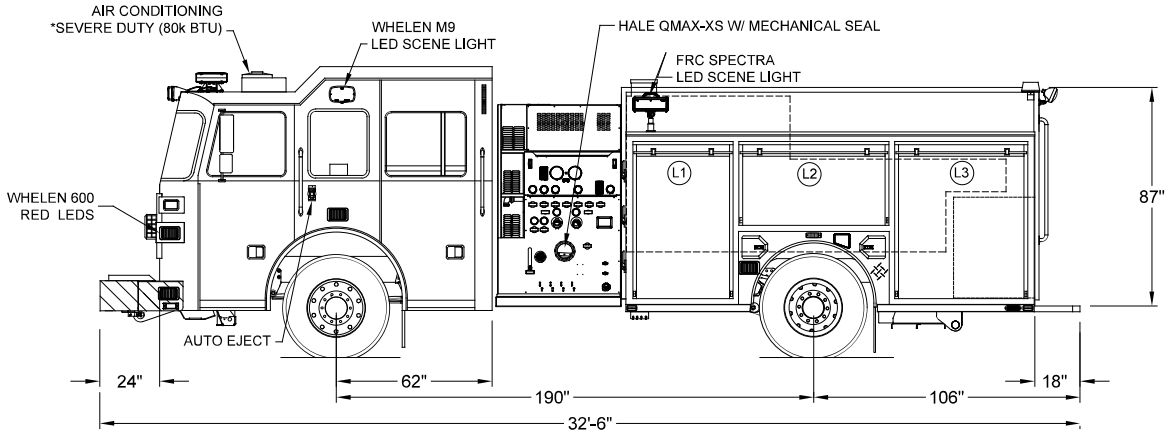

DIMENSIONS SHOWN ON THIS DRAWING ARE APPROXIMATE AND ARE SUBJECT TO MINOR DEVIATIONS DURING CONSTRUCTION.

IN THE EVENT OF A DISCREPANCY BETWEEN THE SUTPHEN SPECIFICATIONS AND DRAWING, THE SUTPHEN SPECIFICATIONS SHALL PREVAIL.

DRAWING IS FOR REFERENCE ONLY. SOME ITEMS PROPOSED MAY NOT BE SHOWN OR NOTED.

CUSTOMER APPROVAL

NAME:

TITLE:

DATE:

REV.	DESCRIPTION	BY	DATE
A	AFTER-PRE-CON	MJC	12/30/17

THIS PRINT IS PROVIDED ON A RESTRICTED BASIS AND IS NOT TO BE USED IN ANY WAY DETRIMENTAL TO THE INTEREST OF SUTPHEN CORPORATION.

DRAWN BY: M. CLARK

DATE: 11/4/17

MFG. FACILITY: DUBLIN

SUTPHEN

LEXINGTON COUNTY FIRE & RESCUE
LEXINGTON, SC

CUSTOM PUMPER - S3 BODY

DWG. NO. HS-6171-72