| COMPT | DOORS | OPENING DIMENSIONS | INSIDE DIMENSIONS | VOLUME |
|---|---|---|---|---|
| L1 | HINGED | 22.75"W x 23.00"H | 29.75"W x 30.00"H x 17.75"D | 9.16 CU. FT. |
| L2 | HINGED | 17.75"W x 23.00"H | 22.75"W x 30.00"H x 17.75"D | 7.01 CU. FT. |
| L3 | HINGED | 42.00"W x 23.00"H | 47.25"W x 30.00"H x 17.75"D | 14.56 CU. FT. |
| | | | | |
| A1 | ROLL-UP | 44.50"W x 20.50"H | 53.00"W x 29.75"H X 47.75"D | 43.57 CU. FT. |

| COMPT | DOORS | OPENING DIMENSIONS | INSIDE DIMENSIONS | VOLUME |
|---|---|---|---|---|
| R1 | HINGED | 22.75"W x 23.00"H | 29.75"W x 30.00"H x 22.75"D | 11.75 CU. FT. |
| R2 | HINGED | 17.75"W x 23.00"H | 22.75"W x 30.00"H x 22.75"D | 8.98 CU. FT. |
| R3 | HINGED | 42.00"W x 23.00"H | 47.25"W X 30.00"H x 22.75"D | 18.66 CU. FT. |
| | | | | |
| | | | TOTAL VOLUME | 113.89 CU. FT. |

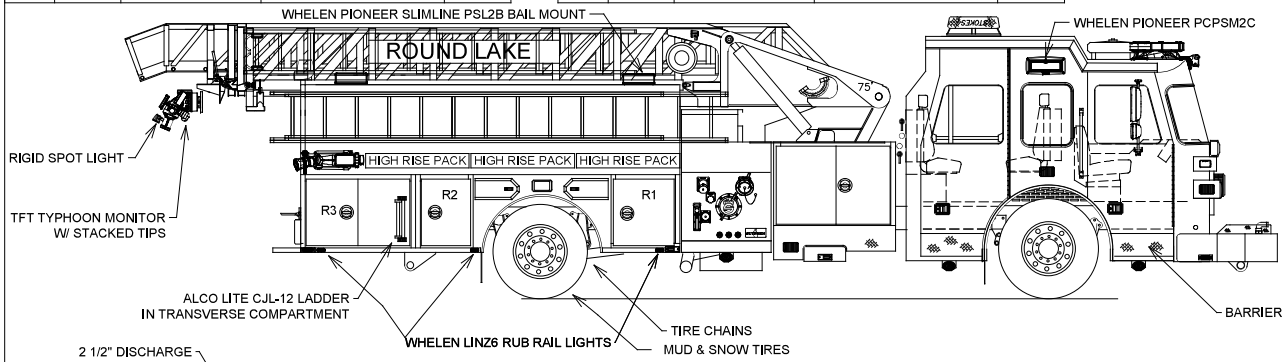


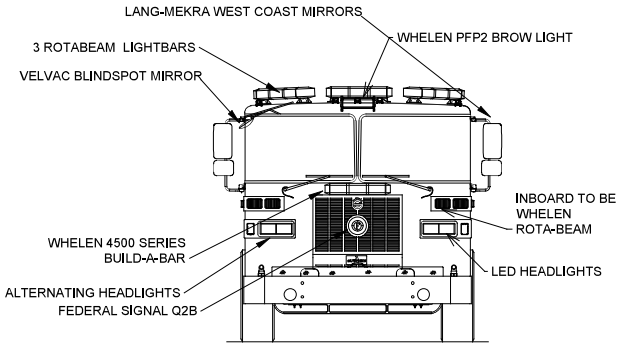


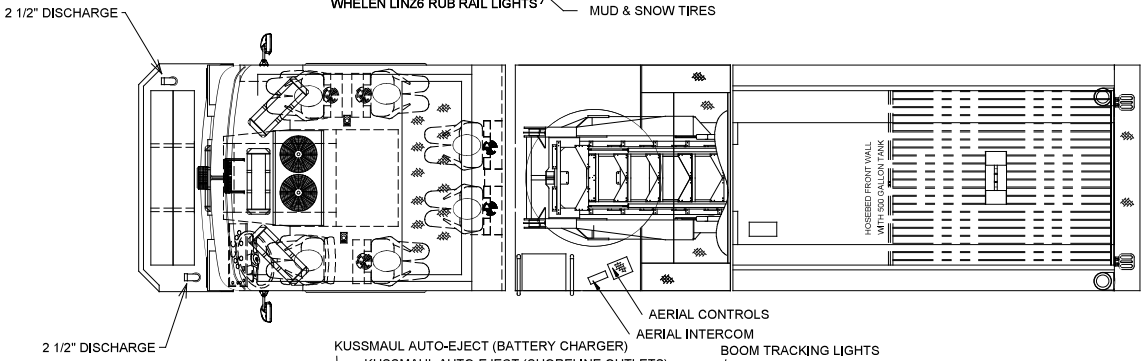


ALCO-LITE QUINT LADDER COMPLIMENT
FL-1 10' FOLDING
PRL-16 16' ROOF
(2) PRL-14 14' ROOF
PEL-24 24' 2-SECTION
PEL-28 28' 2-SECTION
PEL-35 35' 3-SECTION

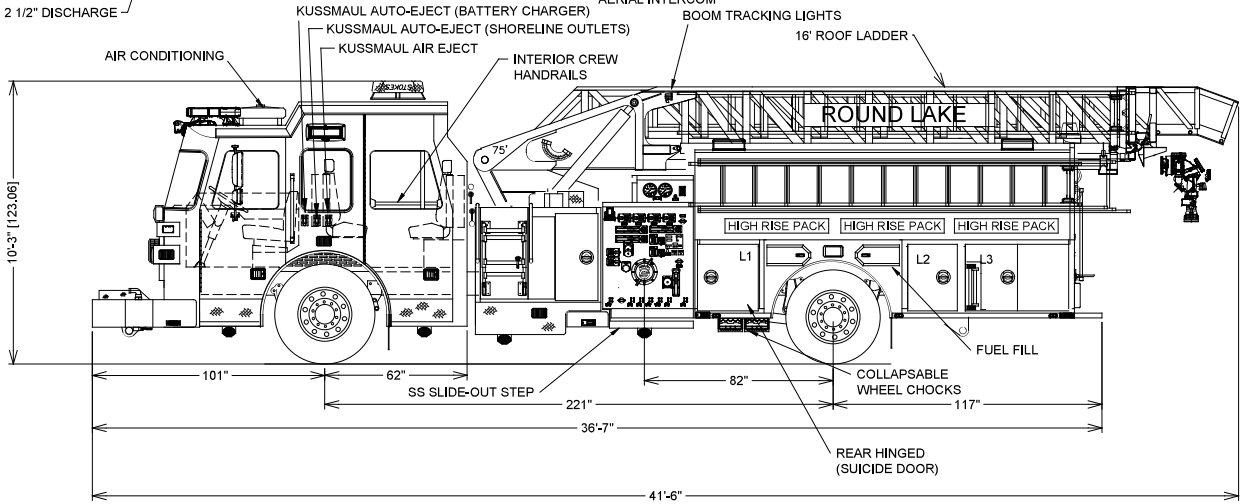


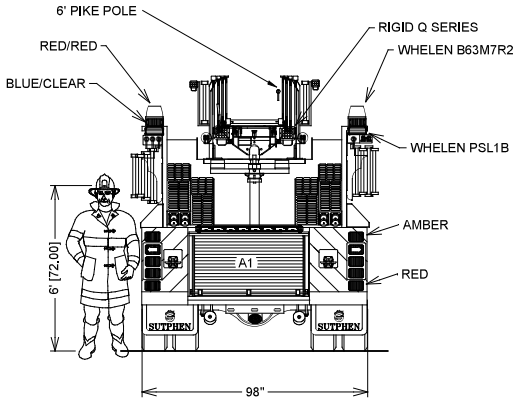


DIMENSIONS SHOWN ON THIS DRAWING ARE APPROXIMATE AND ARE SUBJECT TO MINOR DEVIATIONS DURING CONSTRUCTION.

IN THE EVENT OF A DISCREPANCY BETWEEN THE SUTPHEN SPECIFICATIONS AND DRAWING, THE SUTPHEN SPECIFICATIONS SHALL PREVAIL.

DRAWING IS FOR REFENCE ONLY. SOME ITEMS PROPOSED MAY NOT BE SHOWN OR NOTED.

CUSTOMER APPROVAL

NAME:

TITLE:

DATE:

| REV. | DESCRIPTION | BY | DATE |
|---|---|---|---|
| A.0 | REVISION FOLLOWING THE PRE-CONSTRUCTION MEETING | CM | 11/2/2017 |

THIS PRINT IS PROVIDED ON A RESTRICTED BASIS AND IS NOT TO BE USED IN ANY WAY DETRIMENTAL TO THE INTEREST OF SUTPHEN CORPORATION.

SUTPHEN CORPORATION
FIRE APPARATUS - SINCE 1890
6450 EITERMAN ROAD DUBLIN, OH 43016

DRAWN BY: N. CATALINO

DATE: 4/7/2017

ROUND LAKE FIRE DEPARTMENT
ROUND LAKE, NEW YORK

SL75

DWG. NO.: HS-6136