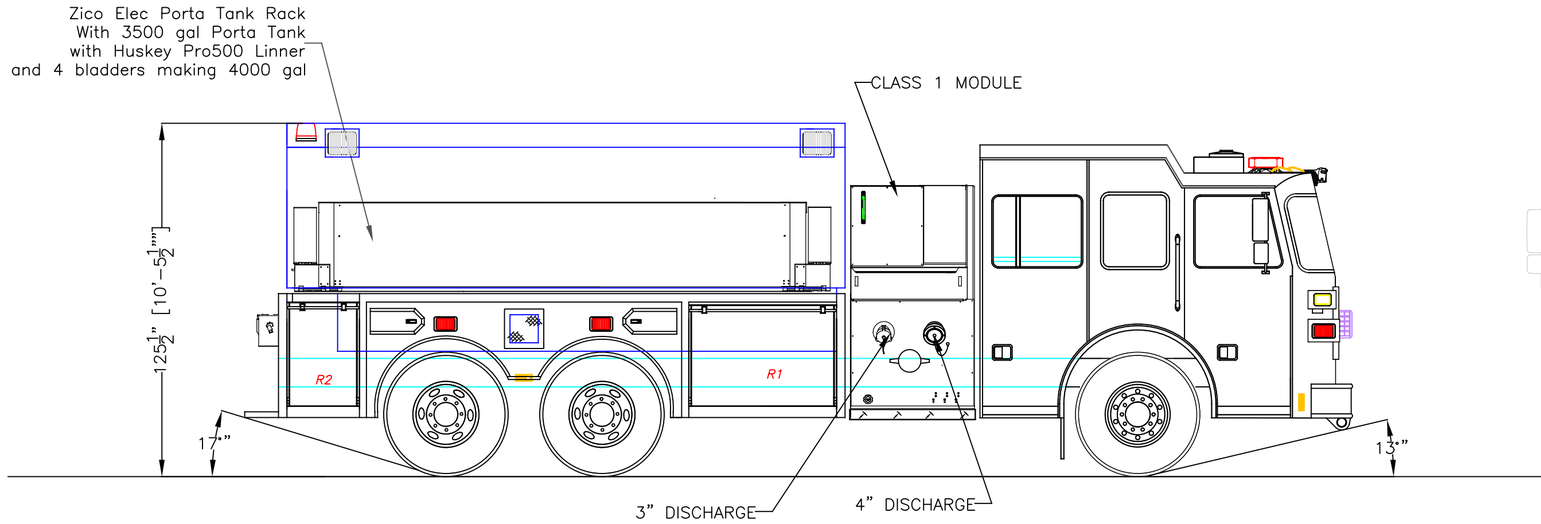

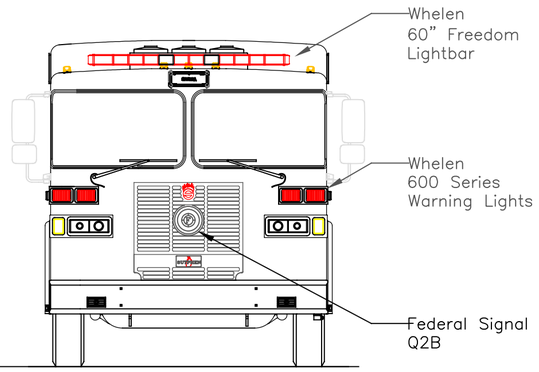

Left Side Compartmentation				
Compt	Doors	Opening Dimensions	Inside Dimensions	Volume
			WxHxD	
L1	Roll Up	50.5x31	56.5x40x24.25	31.7 CU FT
L2	Roll Up	25.5x31	30x40x24.25	16.8 CU FT
Right Side Compartmentation				
Compt	Doors	Opening Dimensions	Inside Dimensions	Volume
R1	Roll Up	50.5x31	56.5x40x24.25	31.7 CU FT
R2	Roll Up	25.5x31	30x40x24.25	16.8 CU FT
			Total Volume	
			97 CU Ft	

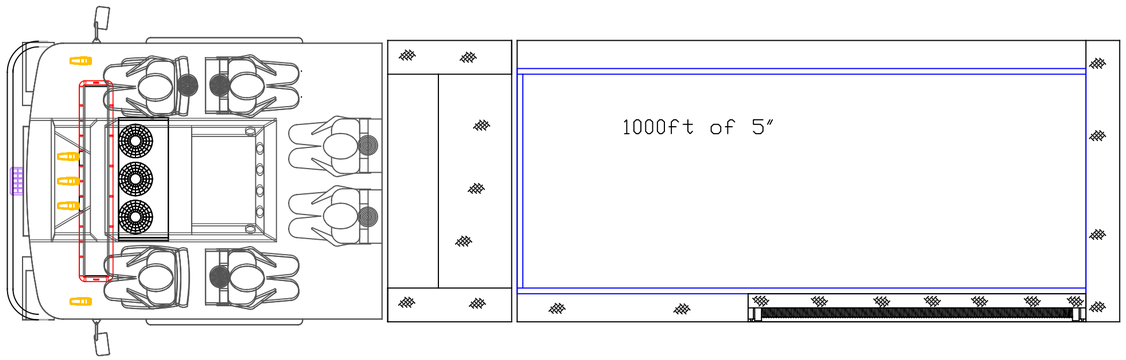

Hale Qmax 2000GPM single stage
Water Tank Capacity 3500 gal

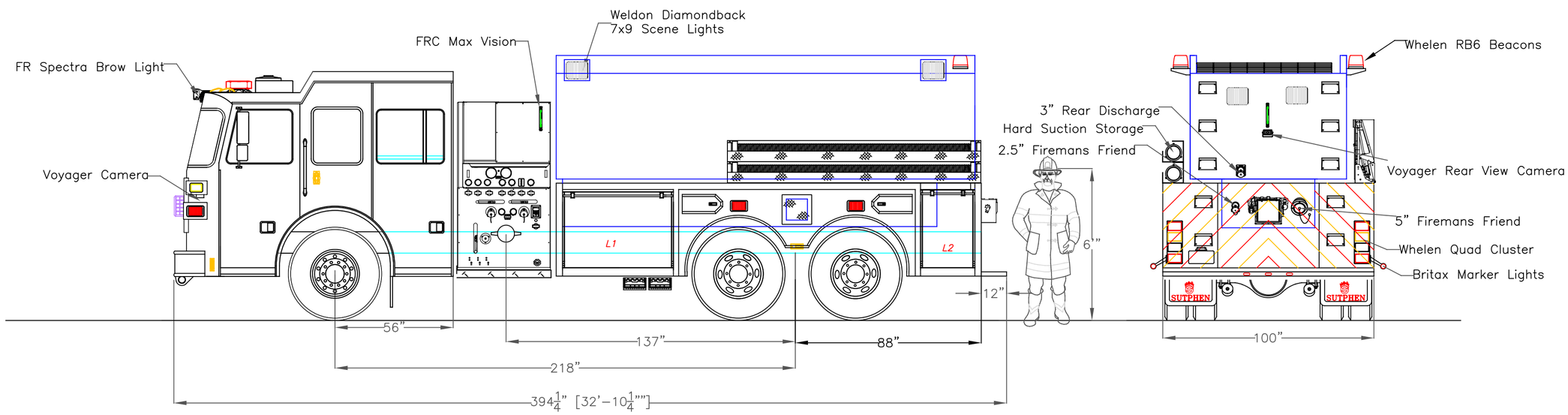

DIMENSIONS SHOWN ON THIS DRAWING ARE APPROXIMATE AND ARE SUBJECT TO MINOR DEVIATIONS DURING CONSTRUCTION.

IN THE EVENT OF A DISCREPANCY BETWEEN THE SUTPHEN SPECIFICATIONS AND DRAWING, THE SUTPHEN SPECIFICATIONS SHALL PREVAIL.

DRAWING IS FOR REFERENCE ONLY. SOME ITEMS PROPOSED MAY NOT BE SHOWN OR NOTED.

CUSTOMER APPROVAL

NAME:

TITLE:

DATE:

REV.	BY	DATE

THIS PRINT IS PROVIDED ON A RESTRICTED BASIS AND IS NOT TO BE USED IN ANY WAY DETRIMENTAL TO THE INTEREST OF SUTPHEN CORPORATION.

DRAWN BY: S.Dorfman

DATE: 5/22/17

MFG. FACILITY: SUTPHEN EAST STERLING TWP, PA

SUTPHEN EAST
55 INNOVATIVE DR
LAKE ARIEL, PA 18436
1-844-776-2889

Mahwah Fire Dept.
Mahwah, NJ

Custom Wet Side Tanker

DWG. NO.: HS 6080