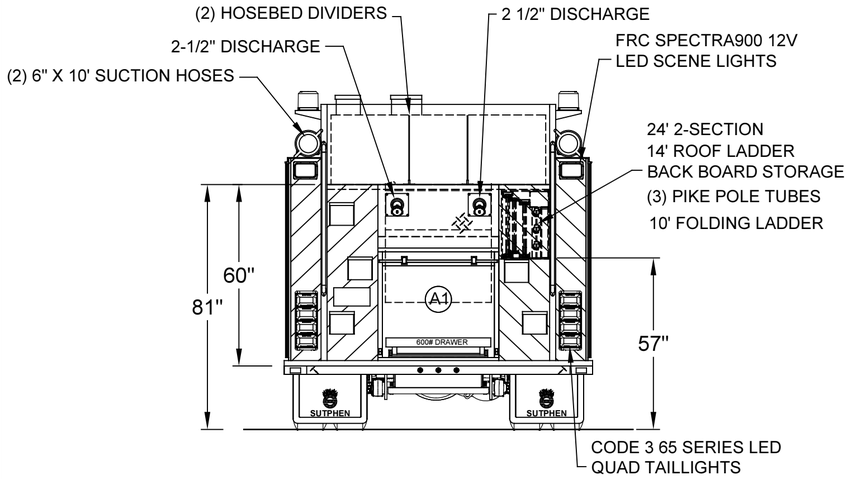


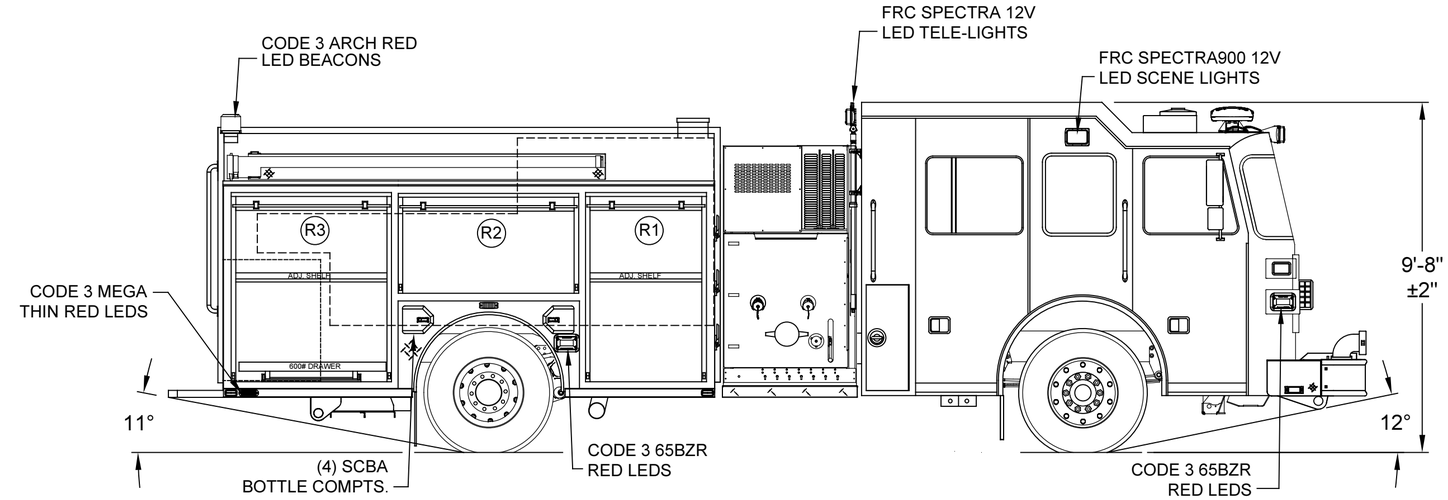


| LEFT SIDE COMPARTMENTATION | | | | |
|---|---|---|---|---|
| COMPT | DOORS | OPENING DIMENSIONS | INSIDE DIMENSIONS | VOLUME |
| L1 | ROLL-UP | 37"w X 56 7/8"h | 43"w X 66"h X 27 1/4"d | 40 CU. FT. |
| L2 | ROLL-UP | 57"w X 27 5/8"h | 61 1/2"w X 36 1/2"h X 27 1/4"d | 30 CU. FT. |
| L3 | ROLL-UP | 50"w X 56 7/8"h | 56"w X 66"h X 27 1/4"d | 52 CU. FT. |

| RIGHT SIDE COMPARTMENTATION | | | | |
|---|---|---|---|---|
| COMPT | DOORS | OPENING DIMENSIONS | INSIDE DIMENSIONS | VOLUME |
| R1 | ROLL-UP | 37"w X 56 7/8"h | 43"w X 66"h X 27 1/4"d (10 1/2"d upper) | 26 CU. FT. |
| R2 | ROLL-UP | 57"w X 27 5/8"h | 61 1/2"w X 36 1/2"h X 10 1/2"d | 13 CU. FT. |
| R3 | ROLL-UP | 50"w X 56 7/8"h | 56"w X 66"h X 27 1/4"d (10 1/2"d upper) | 34 CU. FT. |

| REAR STEP COMPARTMENTS | | | | |
|---|---|---|---|---|
| COMPT | DOORS | OPENING DIMENSIONS | INSIDE DIMENSIONS | VOLUME |
| A1 | ROLL-UP | 37 1/2"w X 31"h | 40"h X 40"w X 29 1/2"d | 27 CU. FT. |

TOTAL: 222 CU.FT.

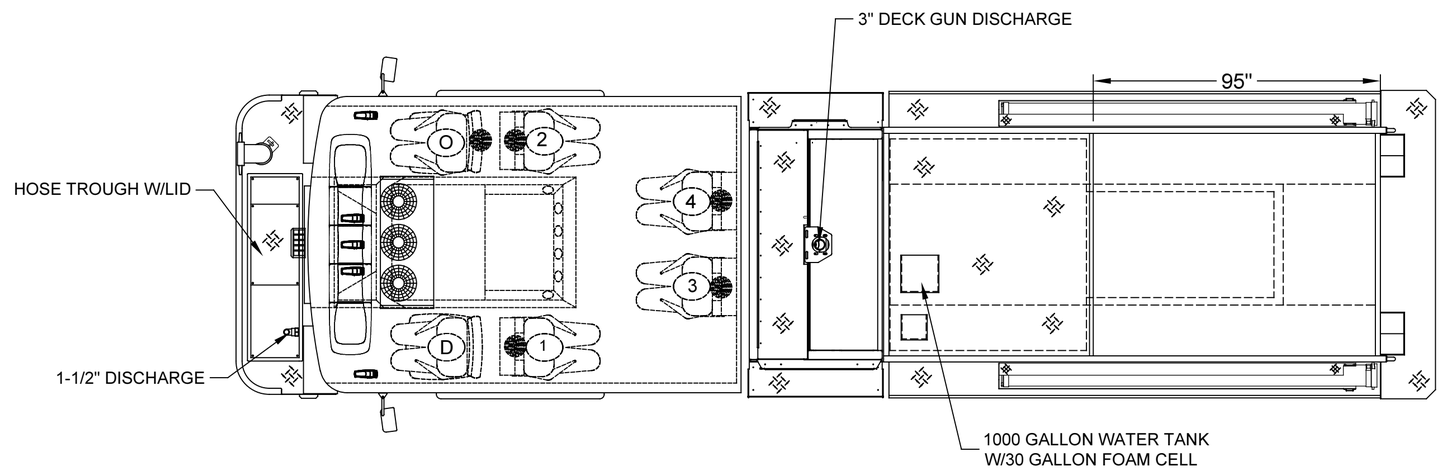


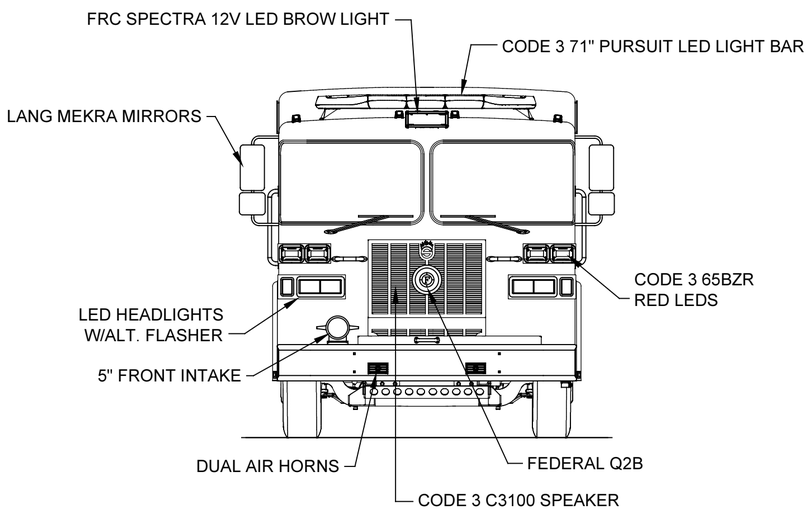


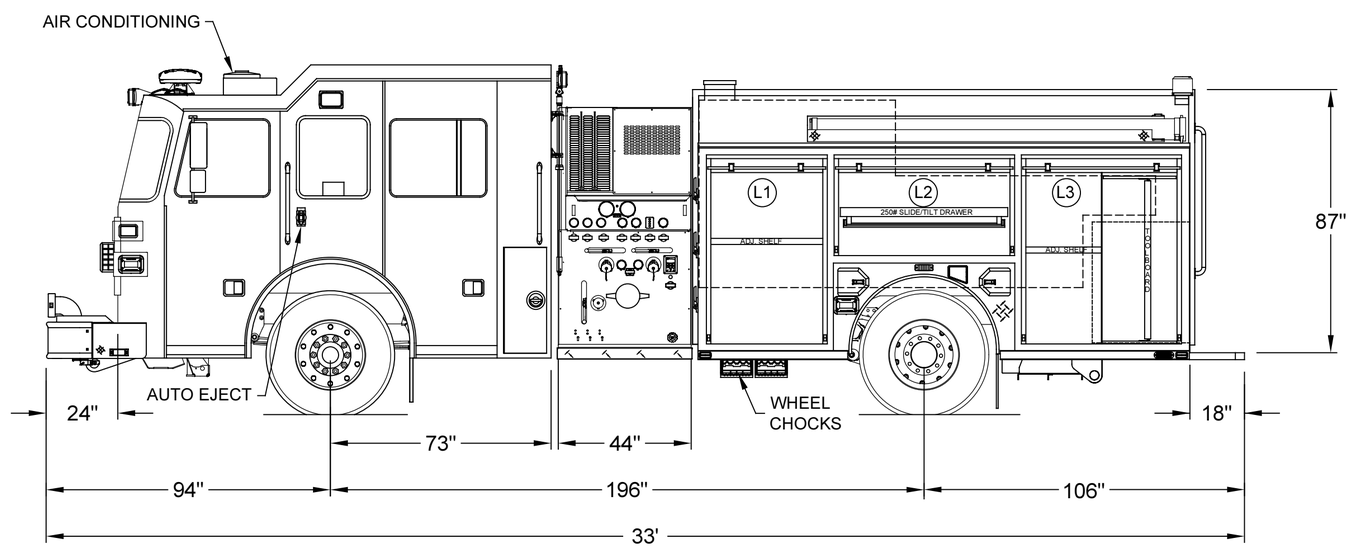


DIMENSIONS SHOWN ON THIS DRAWING ARE APPROXIMATE AND ARE SUBJECT TO MINOR DEVIATIONS DURING CONSTRUCTION.

IN THE EVENT OF A DISCREPANCY BETWEEN THE SUTPHEN SPECIFICATIONS AND DRAWING, THE SUTPHEN SPECIFICATIONS SHALL PREVAIL.

DRAWING IS FOR REFERENCE ONLY. SOME ITEMS PROPOSED MAY NOT BE SHOWN OR NOTED.

CUSTOMER APPROVAL

NAME: _____

TITLE: _____

DATE: _____

| REV. | DESCRIPTION | BY | DATE |
|---|---|---|---|
| PA | PRE-REV-A SHOP ORDER | JM | 11/18/16 |

THIS PRINT IS PROVIDED ON A RESTRICTED BASIS AND IS NOT TO BE USED IN ANY WAY DETRIMENTAL TO THE INTEREST OF SUTPHEN CORPORATION.

DRAWN BY: C. GREEN / J. MORGAN

DATE: 11/15/2016

MFG. FACILITY: DUBLIN

SUTPHEN

DEMO 431
MIDWEST DEMO

CUSTOM PUMPER - S2 BODY

DWG. NO.: HS-5946