COMPT	DOORS	OPENING DIMENSIONS	INSIDE DIMENSIONS	VOLUME
L1	HINGED	22.75"W x 53.00"H	29.75"W x 59.00"H x 17.75"D	18.03 CU. FT.
L2	HINGED	51.50"W x 24.00"H	60.00"W x 28.25"H x 17.75"D	17.41 CU. FT.
L3	HINGED	17.75"W x 53.00"H	34.75"W x 59.00"H x 17.75"D	14.99 CU. FT.
L4	HINGED	42.00"W x 53.00"H	47.25"W x 59.00"H x 17.75"D	29.63 CU. FT.
A1	ROLL-UP	44.50"W x 39.50"H	53.00"W x 29.75"H X 47.75"D	43.57 CU. FT.

COMPT	DOORS	OPENING DIMENSIONS	INSIDE DIMENSIONS	VOLUME
R1	HINGED	22.75"W x 38.00"H	29.75"W x 45.00"H x 22.75"D	17.62 CU. FT.
R2	HINGED	50.00"W x 8.25"H	50.00"W x 14.00"H x 22.75"D	11.65 CU. FT.
R3	HINGED	17.75"W x 38.00"H	22.75"W x 45.00"H x 22.75"D	13.47 CU. FT.
R4	HINGED	42.00"W x 38.00"H	47.25"W X 45.00"H x 22.75"D	27.89 CU. FT.
			TOTAL VOLUME	192.75 CU. FT.

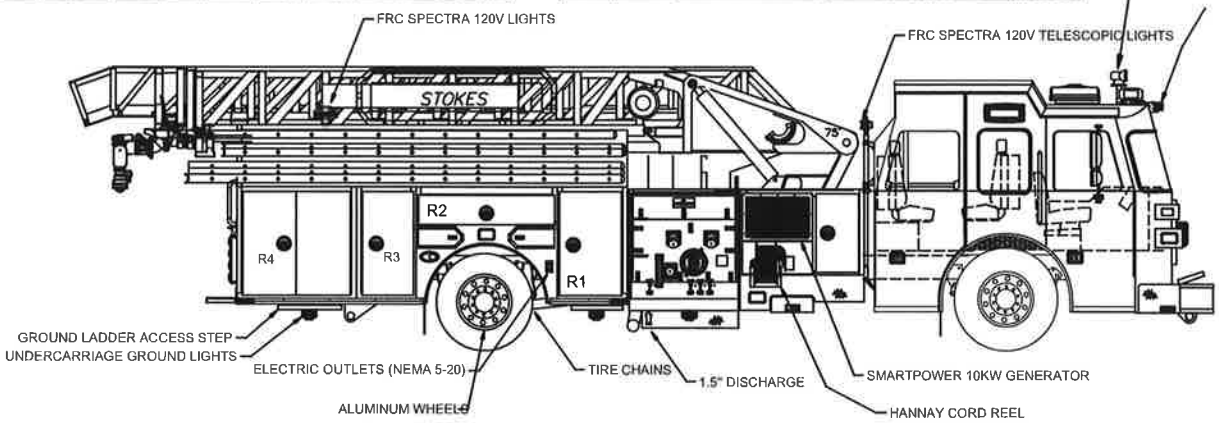

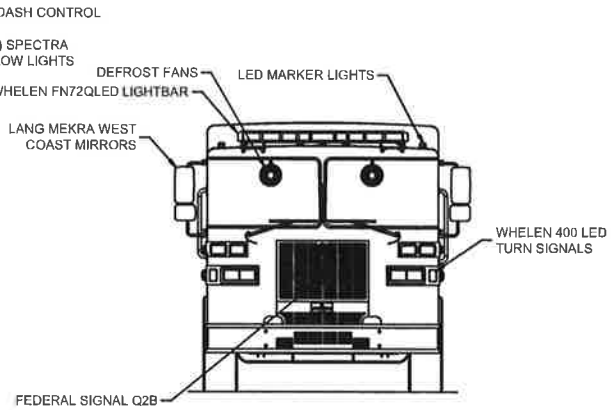

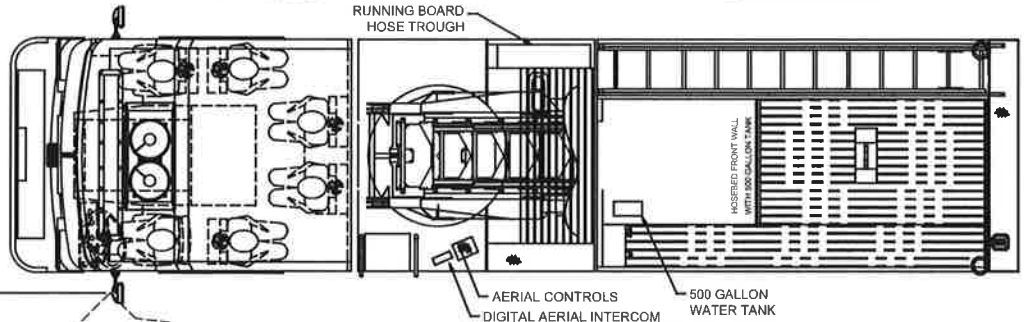

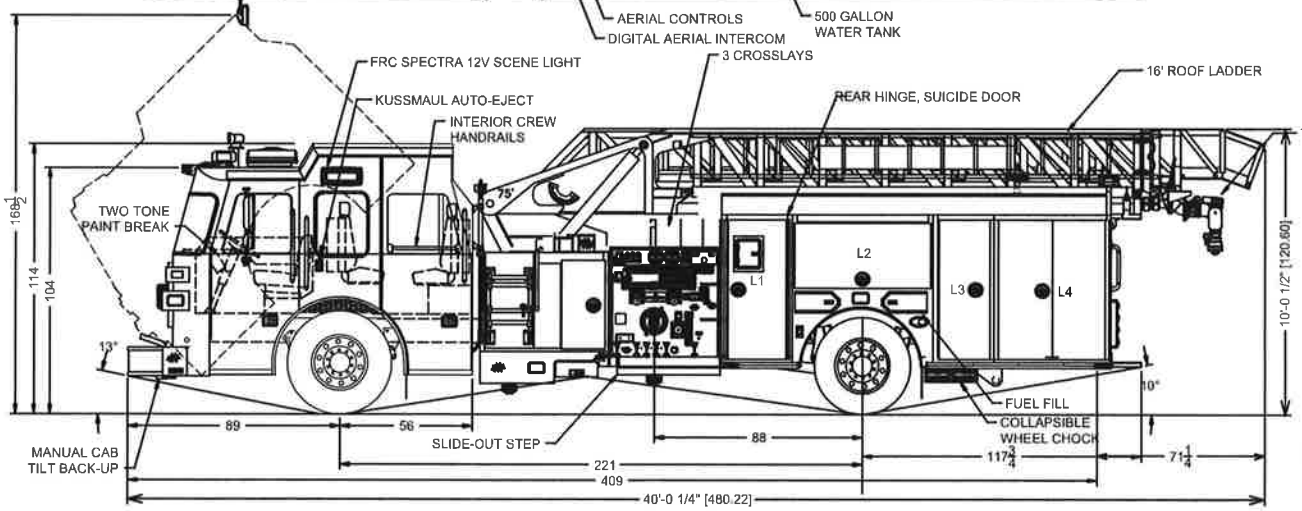

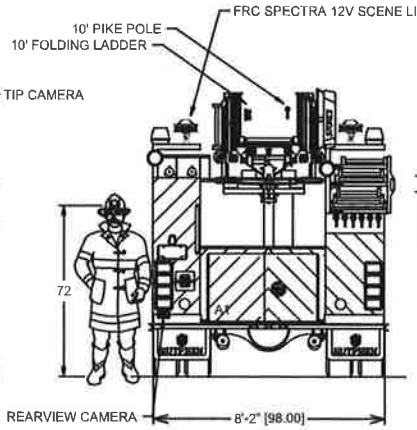

DUO-SAFETY QUINT
LADDER COMPLIMENT
585-A 10' FOLDING
875-A 16' ROOF
900-A 24' 2-SECTION
1225-A 35' 3-SECTION

DIMENSIONS SHOWN ON THIS DRAWING ARE APPROXIMATE AND ARE SUBJECT TO MINOR DEVIATIONS DURING CONSTRUCTION.

IN THE EVENT OF A DISCREPANCY BETWEEN THE SUTPHEN SPECIFICATIONS AND DRAWING, THE SUTPHEN SPECIFICATIONS SHALL PREVAIL.

DRAWING IS FOR REFERENCE ONLY. SOME ITEMS PROPOSED MAY NOT BE SHOWN OR NOTED.

CUSTOMER APPROVAL

NAME: _____

TITLE: _____

DATE: _____

REV.	DESCRIPTION	BY	DATE
A.0	REVISION FOLLOWING PRE-CONSTRUCTION MEETING	CAM	12/12/2016

THIS PRINT IS PROVIDED ON A RESTRICTED BASIS AND IS NOT TO BE USED IN ANY WAY DETRIMENTAL TO THE INTEREST OF SUTPHEN CORPORATION.

DRAWN BY: CAM

DATE: 8-17-2015

MFG. FACILITY: HILLIARD, OH

SUTPHEN

WEIRTON FIRE DEPARTMENT
WEIRTON, WEST VIRGINIA

SL75

DWG. NO.: HS-5811