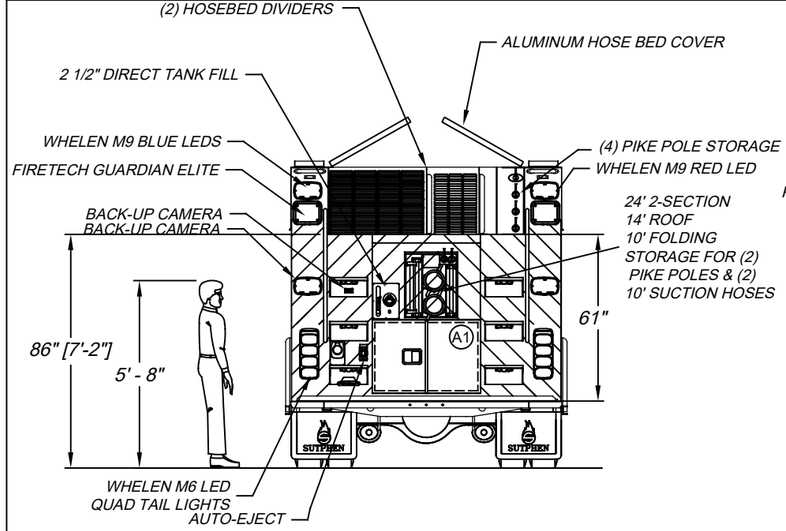

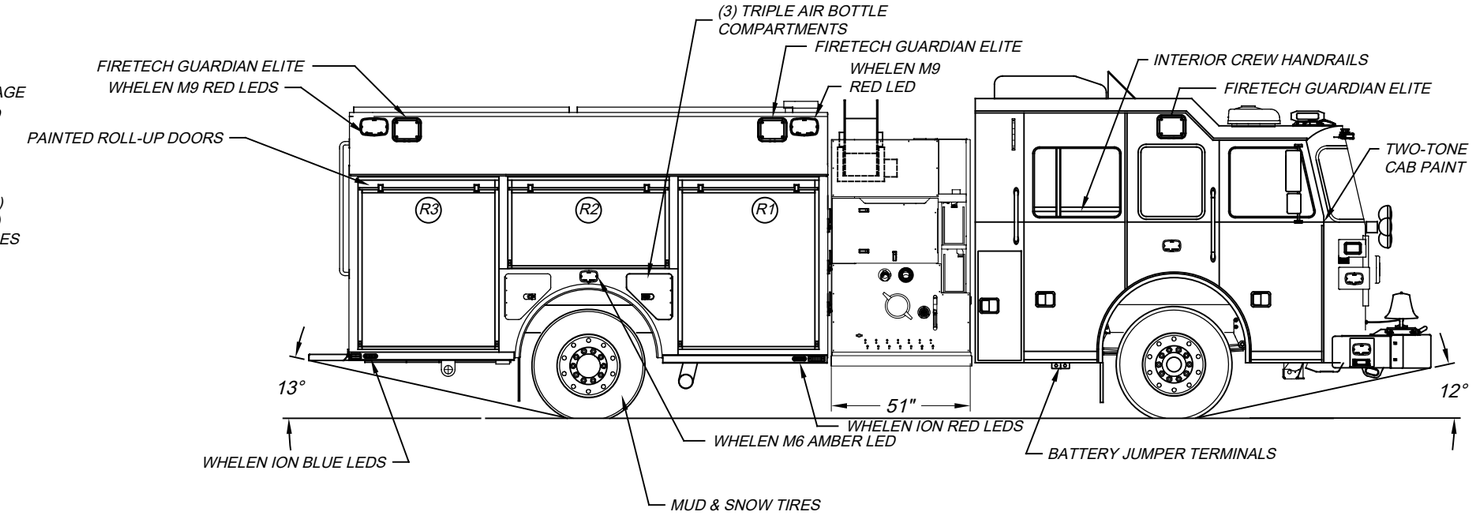

LEFT SIDE COMPARTMENTATION				
COMPT	DOORS	INSIDE DIMENSIONS	DOOR OPENING DIMENSIONS	VOLUME
L1	ROLL-UP	40"W X 66"H X 26"D	37 1/2"W X 56 1/2"H	37.4 CU. FT.
L2	ROLL-UP	59"W X 31 1/2"H X 26"D	56 1/4"W X 27"H	28.4 CU. FT.
L3	ROLL-UP	51 1/2"W X 66"H X 26"D	48 3/4"W X 56 1/2"H	47.4 CU. FT.
L4/L5	LIFT-UP	82"W X 13.5"H X 19"D	75"W X 9.5"H	24 CU. FT.

RIGHT SIDE COMPARTMENTATION				
COMPT	DOORS	INSIDE DIMENSIONS	DOOR OPENING DIMENSIONS	VOLUME
R1	ROLL-UP	40"W X 66"H X 26"D	37 1/2"W X 56 1/2"H	37.4 CU. FT.
R2	ROLL-UP	59"W X 31 1/2"H X 26"D	56 1/4"W X 27"H	28.4 CU. FT.
R3	ROLL-UP	51 1/2"W X 66"H X 26"D	48 3/4"W X 56 1/2"H	47.4 CU. FT.
L4/L5	LIFT-UP	82"W X 13.5"H X 19"D	75"W X 9.5"H	24 CU. FT.

REAR STEP COMPARTMENT				
COMPT	DOORS	INSIDE DIMENSIONS	DOOR OPENING DIMENSIONS	VOLUME
A1	DOUBLE	36.75"w X 19"h	39.5"w X 28"h X 31"d	19.8 CU. FT.

BASE STORAGE: 246 CU. FT.
TOTAL STORAGE: 294 CU. FT.

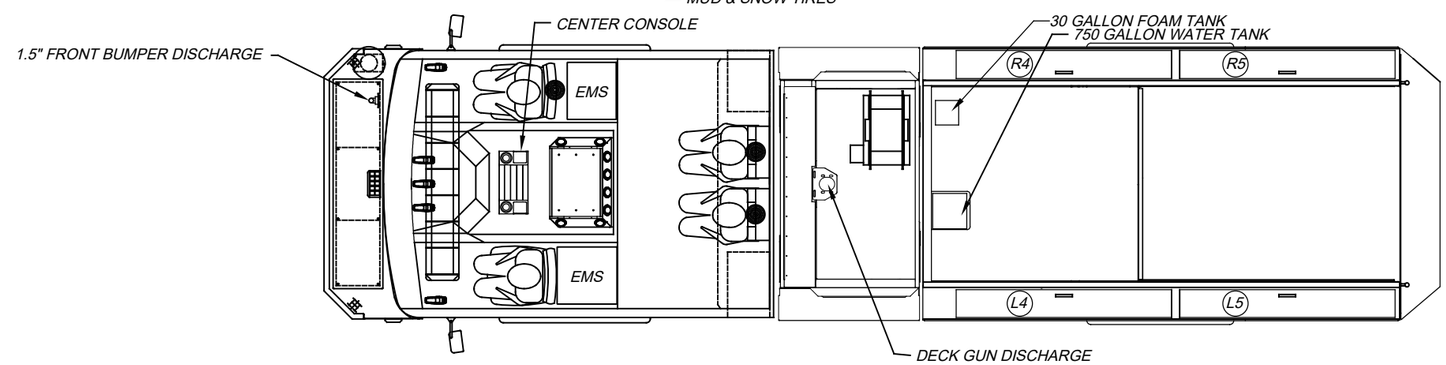

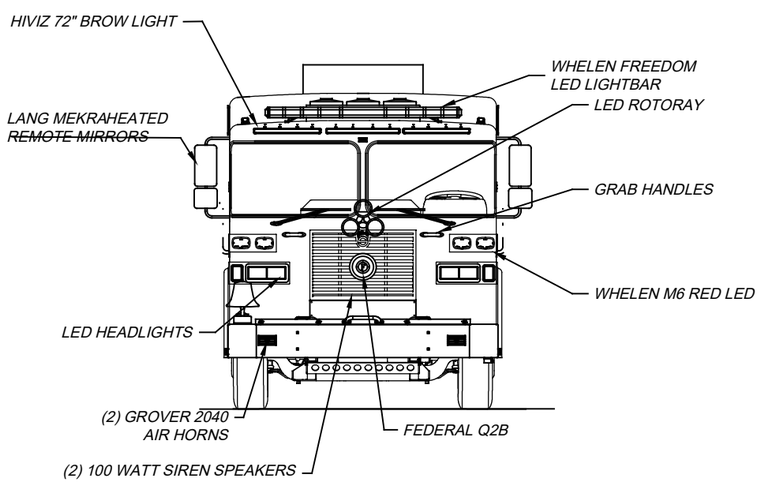

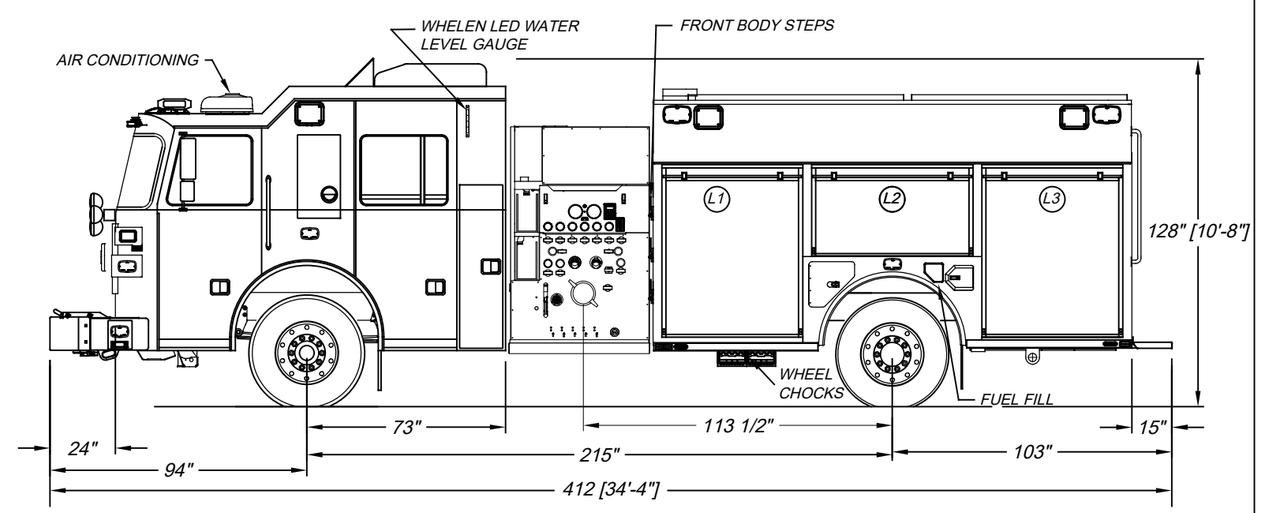

DIMENSIONS SHOWN ON THIS DRAWING ARE APPROXIMATE AND ARE SUBJECT TO MINOR DEVIATIONS DURING CONSTRUCTION.

IN THE EVENT OF A DISCREPANCY BETWEEN THE SUTPHEN SPECIFICATIONS AND DRAWING, THE SUTPHEN SPECIFICATIONS SHALL PREVAIL.

DRAWING IS FOR REFERENCE ONLY. SOME ITEMS PROPOSED MAY NOT BE SHOWN OR NOTED.

CUSTOMER APPROVAL

NAME: _____

TITLE: _____

DATE: _____

REV.	DESCRIPTION	BY	DATE
C	UPDATED TO MATCH SHOP ORDER REV D	AA	11/22/21
B	UPDATED TO MATCH SHOP ORDER REV C	AA	7/7/21
A	UPDATED TO MATCH SHOP ORDER REV B	AA	4/30/21

THIS PRINT IS PROVIDED ON A RESTRICTED BASIS AND IS NOT TO BE USED IN ANY WAY DETRIMENTAL TO THE INTEREST OF SUTPHEN CORPORATION.

DRAWN BY: A.ALEXANDER

DATE: 11/30/2020

MFG. FACILITY: URBANA PUMPER DIVISION

SUTPHEN

HARDIN CO ESD #2
LUMBERTON, TX

PROGRAM 1 CUSTOM PUMPER

DWG. NO.: HS-6966