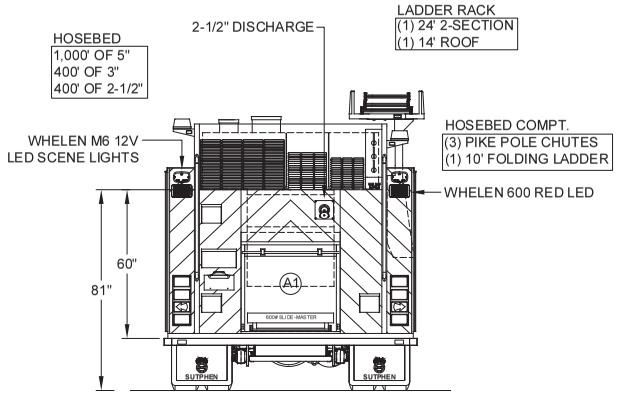

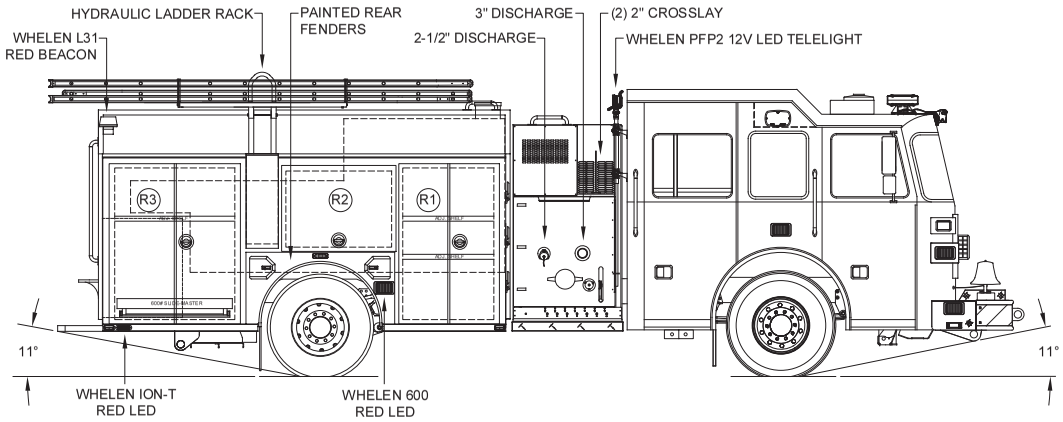

LEFT SIDE COMPARTMENTS					
COMPT	DOORS	OPENING DIMENSIONS	INSIDE DIMENSIONS	VOLUME	
L1	ROLL-UP	35.5"w X 58.2"h	43.1"w X 66"h X 27.3"d	40.8 CU. FT.	(10"h X 10.5"d UPPER)
L2	ROLL-UP	55.5"w X 29.0"h	61.6"w X 36.8"h X 27.3"d	29.8 CU. FT.	(10"h X 10.5"d UPPER)
L3	ROLL-UP	48.5"w X 58.2"h	53.4"w X 66"h X 27.3"d	50.5 CU. FT.	(10"h X 10.5"d UPPER)

RIGHT SIDE COMPARTMENTS					
COMPT	DOORS	OPENING DIMENSIONS	INSIDE DIMENSIONS	VOLUME	
R1	ROLL-UP	35.5"w X 58.2"h	43.1"w X 66"h X 27.3"d	40.8 CU. FT.	(10"h X 10.5"d UPPER)
R2	ROLL-UP	55.5"w X 29.0"h	44.2"w X 36.8"h X 10.5"d	21.4 CU. FT.	(10"h X 10.5"d UPPER)
R3	ROLL-UP	48.5"w X 58.2"h	53.4"w X 66"h X 27.3"d	50.5 CU. FT.	(10"h X 10.5"d UPPER)

REAR STEP COMPARTMENT				
COMPT	DOORS	OPENING DIMENSIONS	INSIDE DIMENSIONS	VOLUME
A1	ROLL-UP	37.5"w X 32.8"h	40"h X 40"w X 31"d	28.7 CU. FT.
			TOTAL:	262.5 CU.FT.

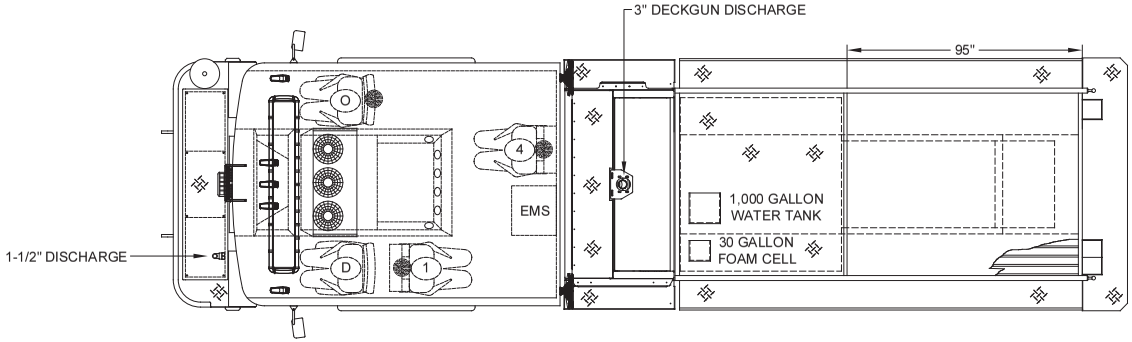

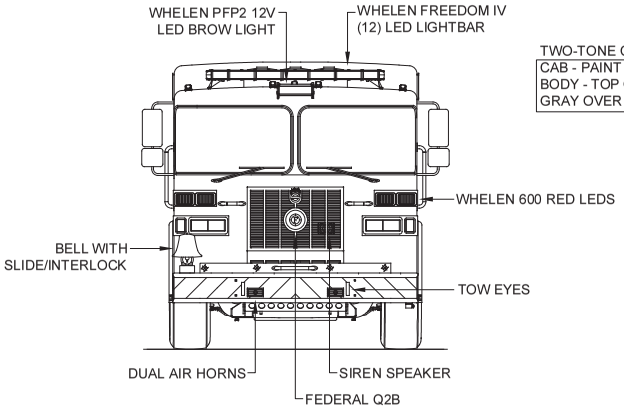

TWO-TONE CAB AND BODY
CAB - PAINT BREAK OPTION #1
BODY - TOP OF BODY COMPTS
GRAY OVER RED

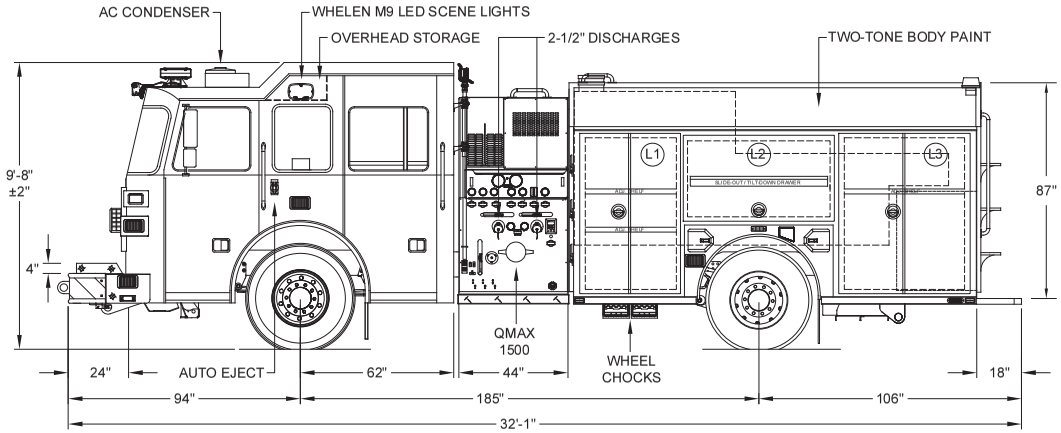

DIMENSIONS SHOWN ON THIS DRAWING ARE APPROXIMATE AND ARE SUBJECT TO MINOR DEVIATIONS DURING CONSTRUCTION.

IN THE EVENT OF A DISCREPANCY BETWEEN THE SUTPHEN SPECIFICATIONS AND DRAWING, THE SUTPHEN SPECIFICATIONS SHALL PREVAIL.

DRAWING IS FOR REFERENCE ONLY. SOME ITEMS PROPOSED MAY NOT BE SHOWN OR NOTED.

CUSTOMER APPROVAL

NAME:

TITLE:

DATE:

REV.	DESCRIPTION	BY	DATE
C	DUO-SAFETY LADDERS WILL SHIP WITH TRUCK AND BE SWITCHED WITH ALCO-LITE LADDERS @ SFEV	RM	11/15/18
B	PIKE POLE LENGTHS ADDED FOR COMPARTMENT IN HOSEBED ; CLARIFICATION ON FRONT-OF-BODY LIGHTS	RM	07/24/18
A	REV-A SHOP ORDER	RM	05/11/18

THIS PRINT IS PROVIDED ON A RESTRICTED BASIS AND IS NOT TO BE USED IN ANY WAY DETRIMENTAL TO THE INTEREST OF SUTPHEN CORPORATION.

DRAWN BY: R.MILLER

DATE: 05/26/16

MFG. FACILITY: DUBLIN

SUTPHEN

RIVIERA BEACH FIRE RESCUE
RIVIERA BEACH, FL

CUSTOM PUMPER - S3 BODY

DWG. NO.: HS-6289