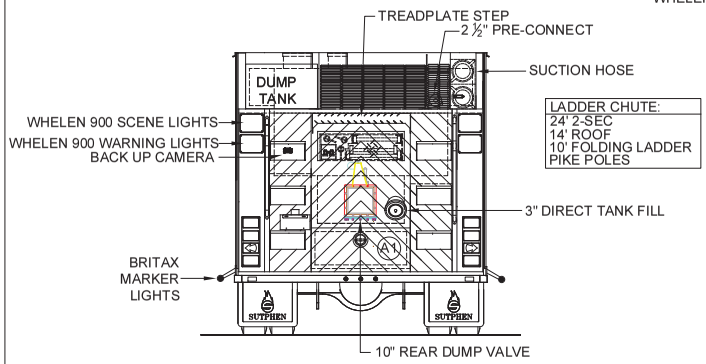

LADDER CHUTE:
24' 2-SEC
14' ROOF
10' FOLDING LADDER
PIKE POLES

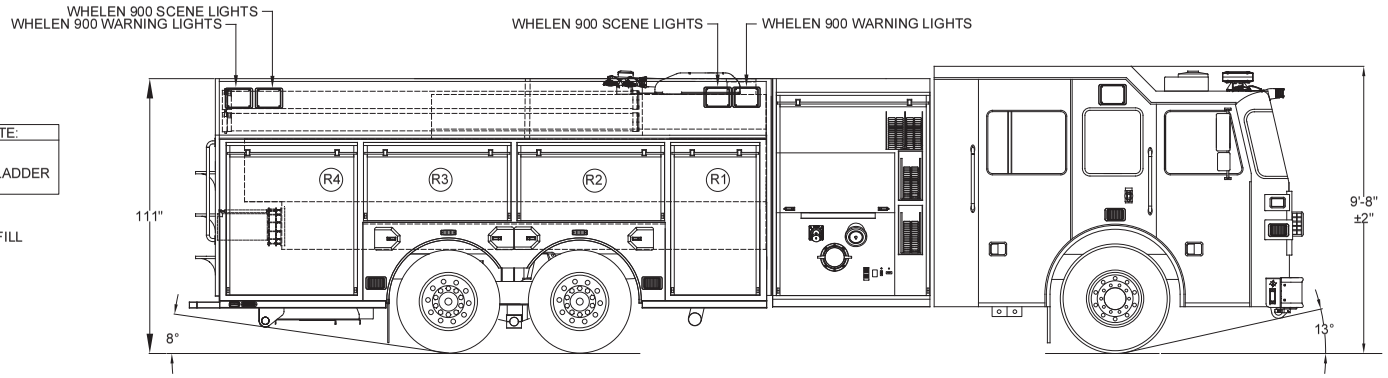

RIGHT SIDE COMPARTMENTS				
COMPT	DOORS	OPENING DIMENSIONS	INSIDE DIMENSIONS	VOLUME
R1	HINGED	33"w X 64"h	36"w X 66"h X 27 1/4"d (10.5"d upper)	26 CU. FT.
R2	HINGED	56.5"w X 31.5"h	60.5"w X 36.75"h X 10.5"d	12 CU. FT.
R3	HINGED	56.5"w X 31.5"h	60.5"w X 36.75"h X 10.5"d	12 CU. FT.
R4	HINGED	50"w X 64"h	53"w X 66"h X 27.25"d (10.5"d upper)	28 CU. FT.

LEFT SIDE COMPARTMENTS				
COMPT	DOORS	OPENING DIMENSIONS	INSIDE DIMENSIONS	VOLUME
L1	HINGED	33"w X 56"h	36"w X 66"h X 27.25"d (10.5"d upper)	26 CU. FT.
L2	HINGED	56.5"w X 25.5"h	60.5"w X 36.75"h X 10.5"d	12 CU. FT.
L3	HINGED	56.5"w X 25.5"h	60.5"w X 36.75"h X 10.5"d	12 CU. FT.
L4	HINGED	50"w X 56"h	53"w X 66"h X 27.25"d (10.5"d upper)	28 CU. FT.

REAR STEP COMPARTMENTS				
COMPT	DOORS	OPENING DIMENSIONS	INSIDE DIMENSIONS	VOLUME
A1	FOLD-DOWN	37"w X 13"h	40"w X 16"h X 20"d	7 CU. FT.
			TOTAL:	163 CU.FT.

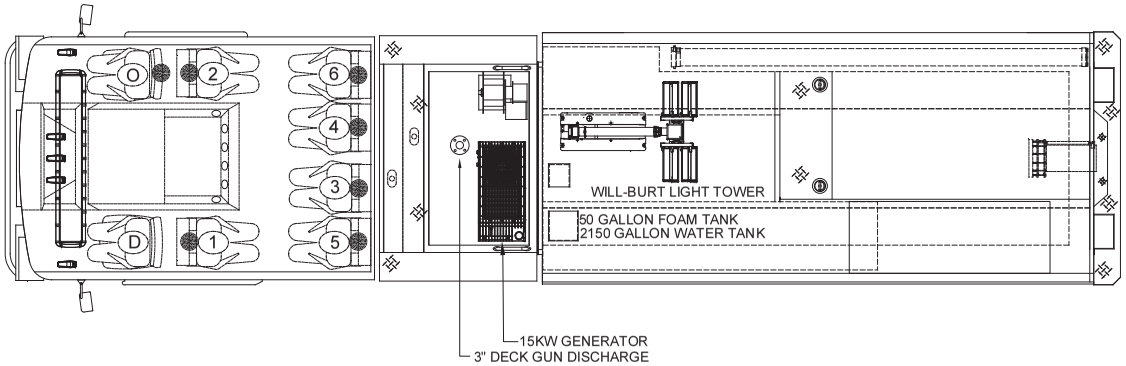

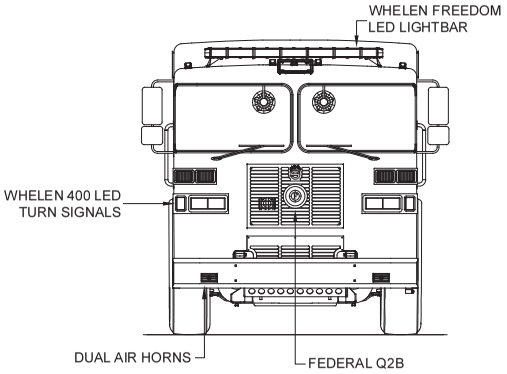

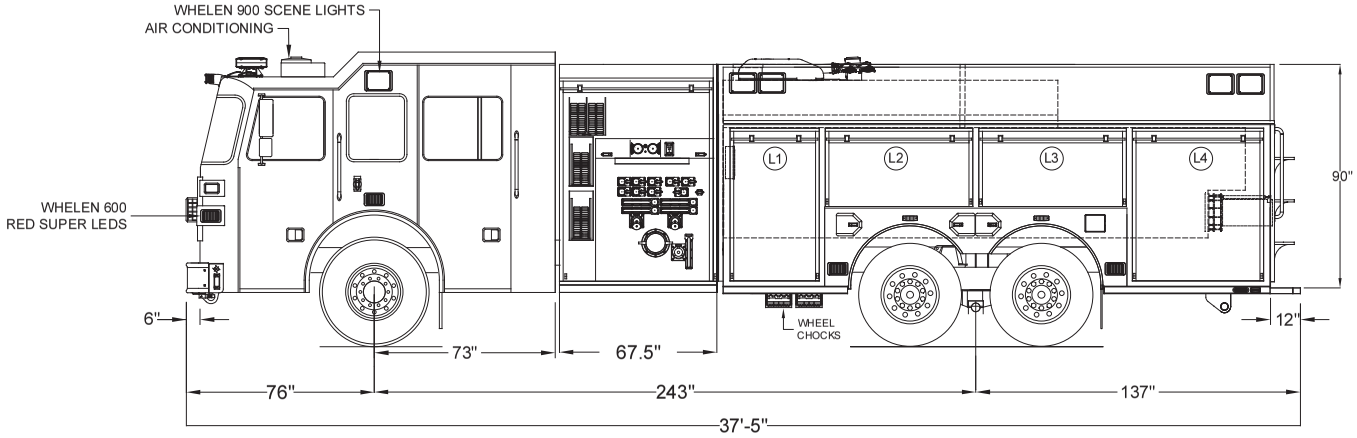

THE INFORMATION PRESENTED ON THIS DOCUMENTS IS TO BE USED FOR ILLUSTRATIVE PURPOSED ONLY AND IT MAY NOT REFLECT, AESTHETICALLY OR OTHERWISE, PAST OR PRESENT MANUFACTURED PRODUCTS. SUTPHEN CORPORATION RESERVES THE RIGHT TO MAKE CHANGES IN THE DESIGN OF OUR PRODUCTS AT ANY TIME, WITHOUT NOTIFICATION. DIMENSIONS AND ITEM LOCATIONS ARE APPROXIMATE.

CUSTOMER APPROVAL

NAME:

TITLE:

DATE:

REV.	DESCRIPTION	BY	DATE
G	VERBIAGE CORRECTED FOR 12V POWER TO R4 COMPARTMENT	RM	02/06/19
F	MID-INSPECTION UPDATES	RM	02/05/19
E	UPDATE TO CALL-OUT FOR PAINT BREAK OPTION AND DESCRIPTION (TWO-TONE ADDED FOR PUMP MODULE)	RM	01/15/19
D	REAR BODY CHEVRONS CHANGED TO #L1 FLUORESCENT YELLOW ; PUMP PANEL COLOR CODING SPECIFIED	RM	01/09/19

THIS PRINT IS PROVIDED ON A RESTRICTED BASIS AND IS NOT TO BE USED IN ANY WAY DETRIMENTAL TO THE INTEREST OF SUTPHEN CORPORATION.

DRAWN BY: J.MORGAN

DATE: 05/17/18

MFG. FACILITY: DUBLIN

SUTPHEN

HOPE FIRE COMPANY
NORTHERN CAMBRIA, PA

CUSTOM TANKER

DWG. NO.: HS-6233