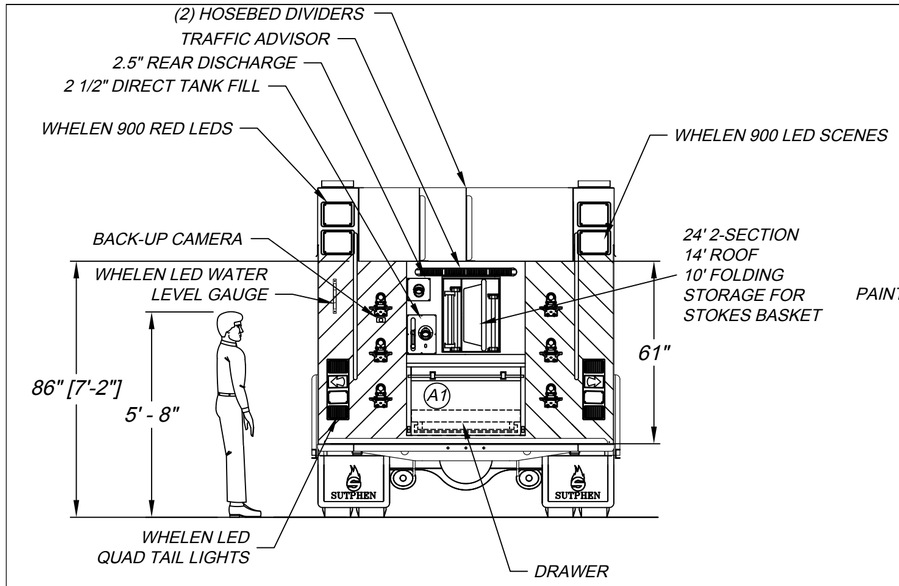

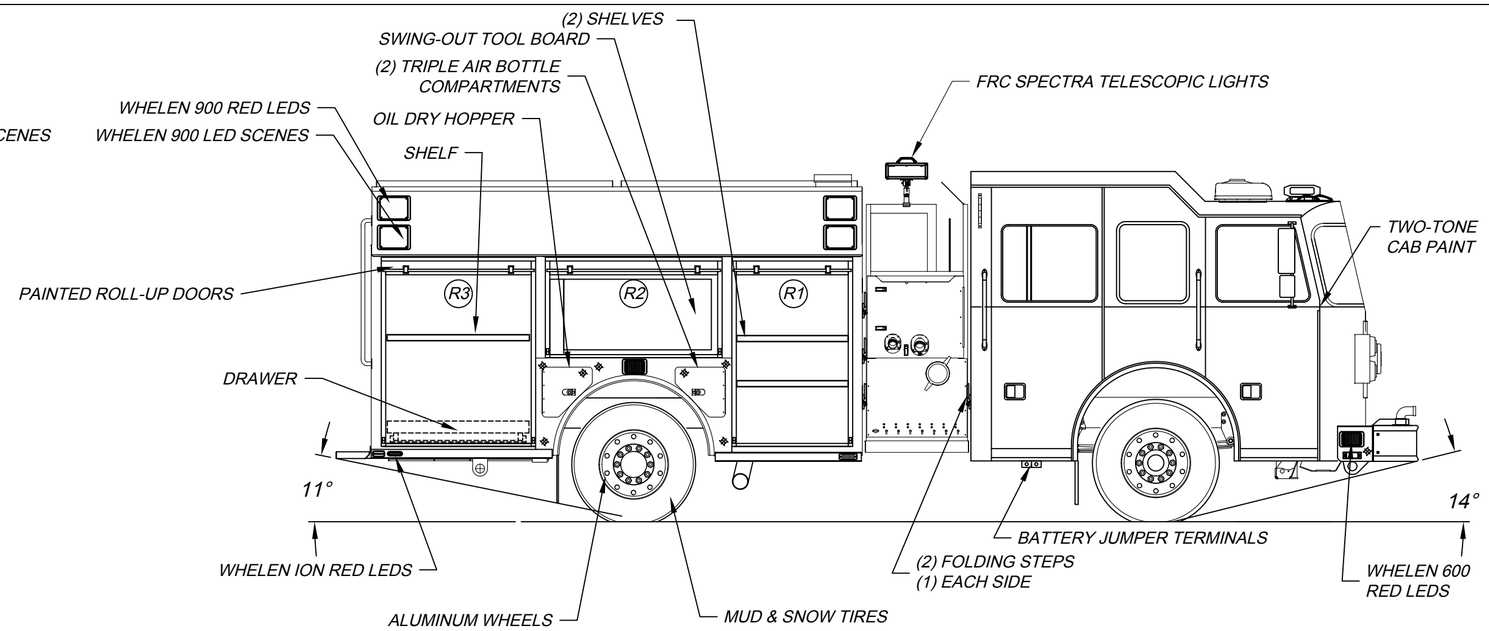

LEFT SIDE COMPARTMENTATION				
COMPT	DOORS	INSIDE DIMENSIONS	DOOR OPENING DIMENSIONS	VOLUME
L1	ROLL-UP	40"W X 66"H X 26"D	37 1/2"W X 56 1/2"H	37.4 CU. FT.
L2	ROLL-UP	59"W X 31 1/2"H X 26"D	56 1/4"W X 27"H	28.4 CU. FT.
L3	ROLL-UP	51 1/2"W X 66"H X 26"D	48 3/4"W X 56 1/2"H	47.4 CU. FT.
L4/L5	LIFT-UP	82"W X 13.5"H X 19"D	75"W X 9.5"H	24 CU. FT.

RIGHT SIDE COMPARTMENTATION				
COMPT	DOORS	INSIDE DIMENSIONS	DOOR OPENING DIMENSIONS	VOLUME
R1	ROLL-UP	40"W X 66"H X 26"D	37 1/2"W X 56 1/2"H	37.4 CU. FT.
R2	ROLL-UP	59"W X 31 1/2"H X 26"D	56 1/4"W X 27"H	28.4 CU. FT.
R3	ROLL-UP	51 1/2"W X 66"H X 26"D	48 3/4"W X 56 1/2"H	47.4 CU. FT.
L4/L5	LIFT-UP	82"W X 13.5"H X 19"D	75"W X 9.5"H	24 CU. FT.

REAR STEP COMPARTMENT				
COMPT	DOORS	INSIDE DIMENSIONS	DOOR OPENING DIMENSIONS	VOLUME
A1	ROLL-UP	39 1/2"W X 28"H X 31"D	36 3/4"W X 19"H	19.8 CU. FT.

BASE STORAGE: 246 CU. FT.
TOTAL STORAGE: 294 CU. FT.

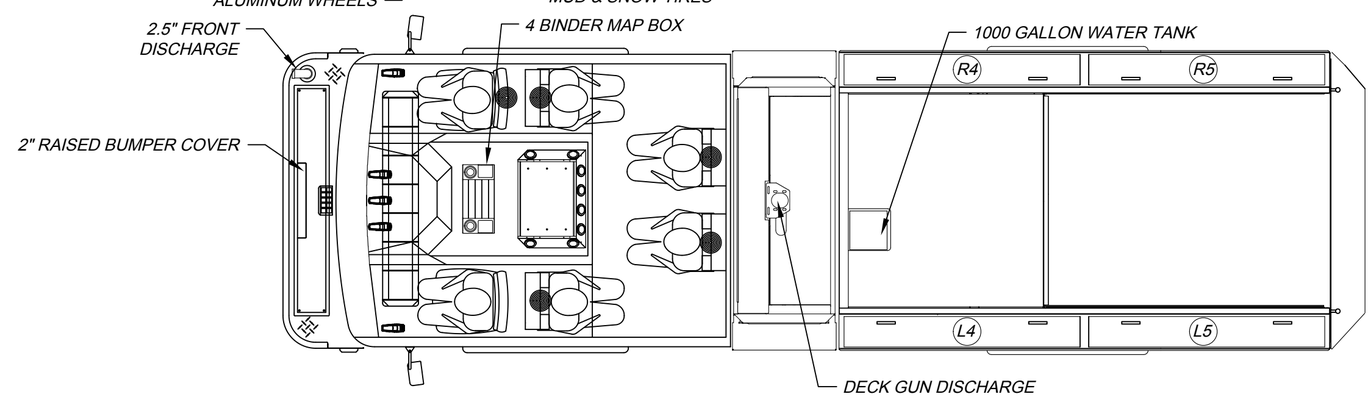

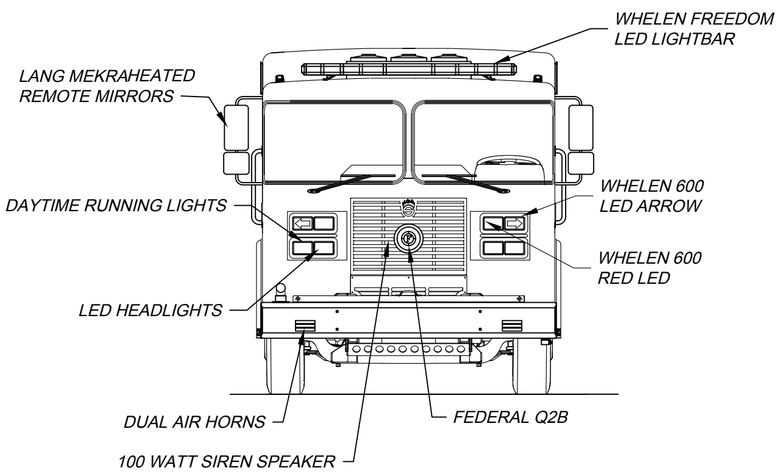

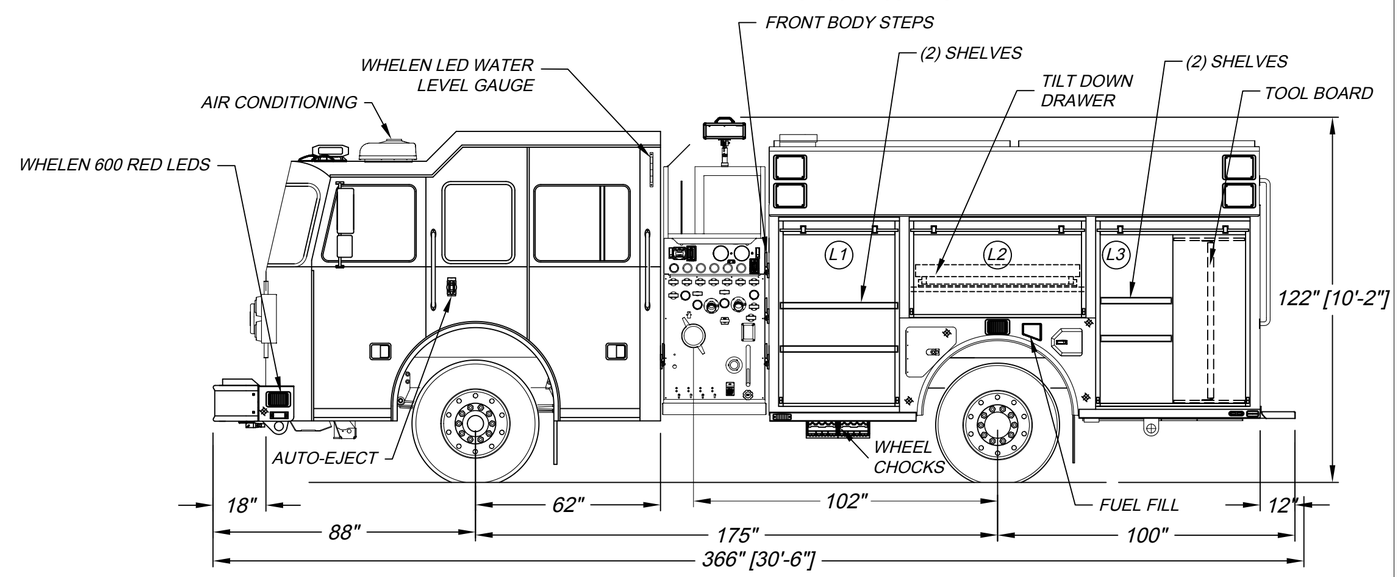

DIMENSIONS SHOWN ON THIS DRAWING ARE APPROXIMATE AND ARE SUBJECT TO MINOR DEVIATIONS DURING CONSTRUCTION.

IN THE EVENT OF A DISCREPANCY BETWEEN THE SUTPHEN SPECIFICATIONS AND DRAWING, THE SUTPHEN SPECIFICATIONS SHALL PREVAIL.

DRAWING IS FOR REFERENCE ONLY. SOME ITEMS PROPOSED MAY NOT BE SHOWN OR NOTED.

CUSTOMER APPROVAL

NAME: _____

TITLE: _____

DATE: _____

REV.	DESCRIPTION	BY	DATE
C	Revised to match shop order	JNH	3/21/2019
B	Revised to match shop order	JNH	3/16/2019

THIS PRINT IS PROVIDED ON A RESTRICTED BASIS AND IS NOT TO BE USED IN ANY WAY DETRIMENTAL TO THE INTEREST OF SUTPHEN CORPORATION.

DRAWN BY: J.HAULMAN

DATE: 1/5/2019

MFG. FACILITY: SPRINGFIELD

SUTPHEN

Champion Township Fire Department
Warren, OH.

PROGRAM 1 CUSTOM PUMPER

DWG. NO.: HS-6427