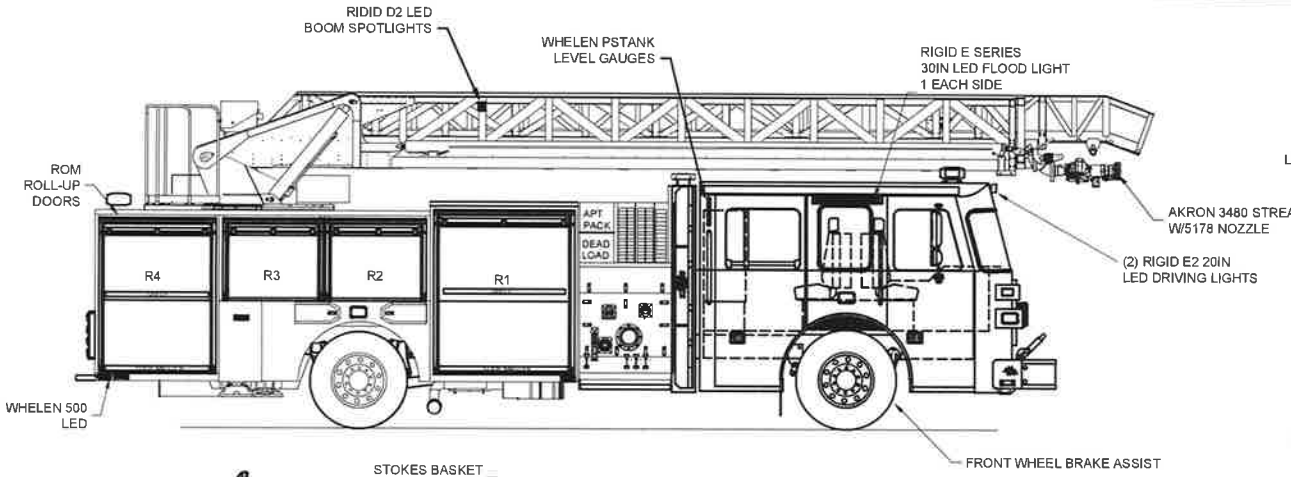

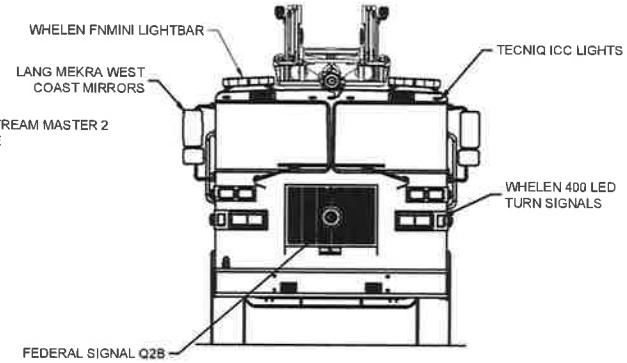

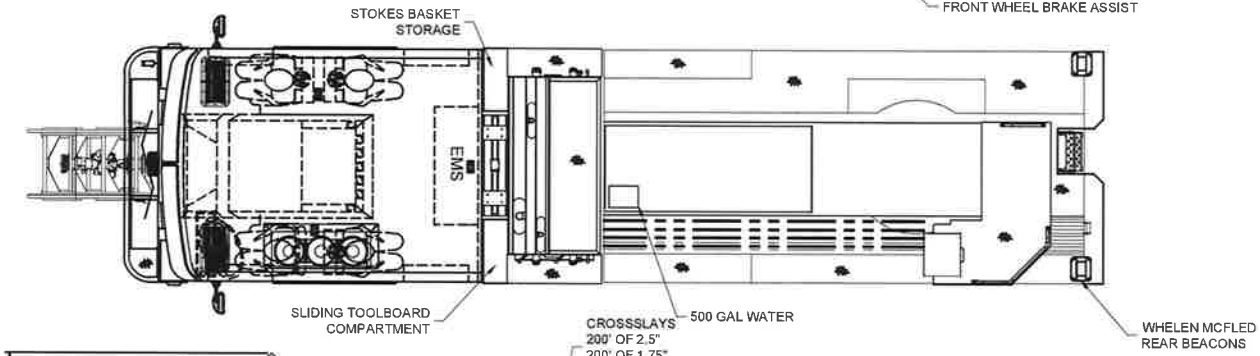

COMPT	DOORS	OPENING DIMENSIONS	INSIDE DIMENSIONS	VOLUME
L1 UPPER	ROLL-UP	55.50"W x 32.00"H	62.12"W x 41.12"H x 15.00"D	14.78 CU. FT.
L1 LOWER	ROLL-UP	55.50"W x 30.00"H	62.12"W x 30.00"H x 23.93"D	25.80 CU. FT.
L2	ROLL-UP	38.00"W x 26.625"H	44.50"W x 35.75"H x 10.00"D	9.21 CU. FT.
L3	ROLL-UP	38.00"W x 26.625"H	44.50"W x 35.75"H x 10.00"D	9.21 CU. FT.
L4 UPPER	ROLL-UP	46.00"W x 57.50"H	50.06"W x 56.50"H x 15.00"D	10.57 CU. FT.
L4 LOWER	ROLL-UP	46.00"W x 30.00"H	50.06"W x 30.00"H x 23.93"D	20.80 CU. FT.
R1 UPPER	ROLL-UP	55.50"W x 32.00"H	62.12"W x 41.12"H x 15.00"D	14.78 CU. FT.
R1 LOWER	ROLL-UP	55.50"W x 30.00"H	62.12"W x 30.00"H x 23.93"D	25.80 CU. FT.
R2	ROLL-UP	38.00"W x 26.625"H	44.50"W x 35.75"H x 10.00"D	9.21 CU. FT.
R3	ROLL-UP	38.00"W x 26.625"H	44.50"W x 35.75"H x 10.00"D	9.21 CU. FT.
R4 UPPER	ROLL-UP	46.00"W x 57.50"H	50.06"W x 56.50"H x 15.00"D	10.57 CU. FT.
R4 LOWER	ROLL-UP	46.00"W x 30.00"H	50.06"W x 30.00"H x 23.93"D	20.80 CU. FT.
A1	HINGED	18.00"W x 12.00"H	18.00"W x 12.00"H x 24.00"D	3.00 CU. FT.
			TOTAL VOLUME	183.74 CU. FT.

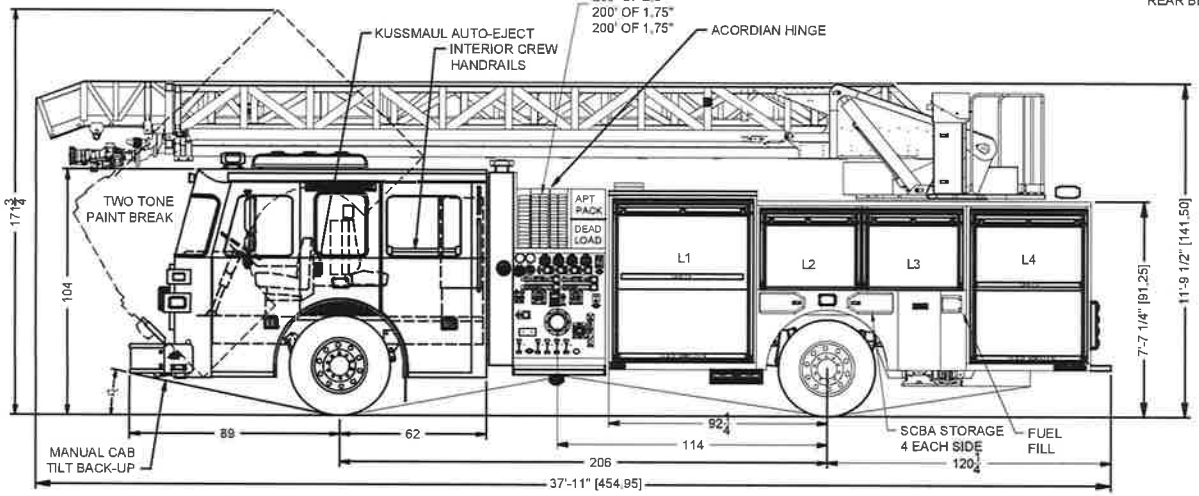

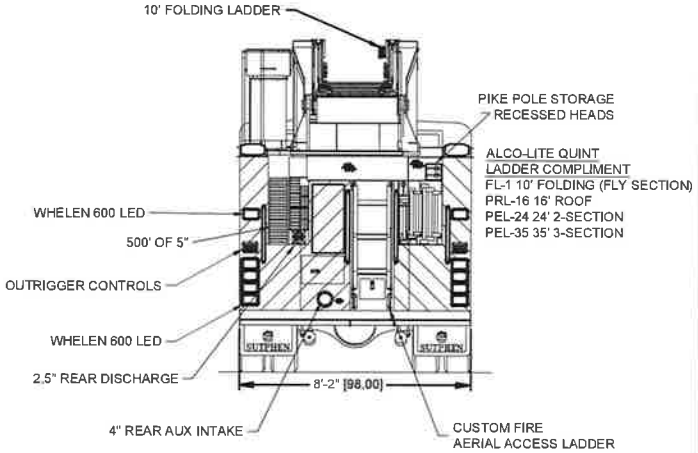

DIMENSIONS SHOWN ON THIS DRAWING ARE APPROXIMATE AND ARE SUBJECT TO MINOR DEVIATIONS DURING CONSTRUCTION.

IN THE EVENT OF A DISCREPANCY BETWEEN THE SUTPHEN SPECIFICATIONS AND DRAWING, THE SUTPHEN SPECIFICATIONS SHALL PREVAIL.

DRAWING IS FOR REFERENCE ONLY, SOME ITEMS PROPOSED MAY NOT BE SHOWN OR NOTED.

CUSTOMER APPROVAL

NAME:

TITLE:

DATE:

REV.	DESCRIPTION	BY	DATE
D.0	UPDATED TO MATCH SHOP ORDER	CM	6/28/2017
C.0	UPDATED TO MATCH SHOP ORDER	CM	4/5/2017
B.0	UPDATED TO MATCH SHOP ORDER	CM	3/14/2017
A.0	REVISION FOLLOWING PRE-CONSTRUCTION MEETING	CM	2/3/2017

DRAWN BY: CAM

DATE: 12/23/16

MFG. FACILITY: HILLIARD

SUTPHEN

PAINESVILLE FIRE DEPARTMENT
PAINSEVILLE, OH

SLR75

DWG. NO HS-6007

THIS PRINT IS PROVIDED ON A RESTRICTED BASIS AND IS NOT TO BE USED IN ANY WAY DETRIMENTAL TO THE INTEREST OF SUTPHEN CORPORATION.