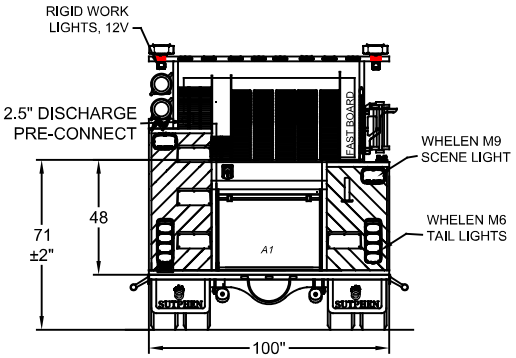

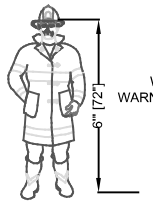

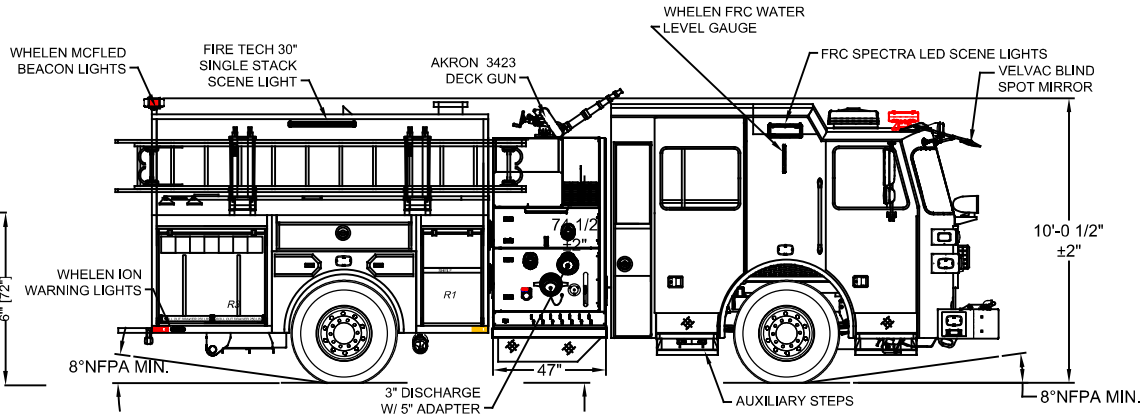

Left Side Compartmentation				
Compt	Doors	Opening Dimensions	Inside Dimensions	Volume
			WxHxD	
L1	Roll Up	23x49	30x59x24.25	24.8 CU FT
L2	Roll Up	53x18	60x28x24.25	32 CU FT
L3	Roll Up	43x49	50x59x24.25	41.4 CU FT
Right Side Compartmentation				
Compt	Doors	Opening Dimensions	Inside Dimensions	Volume
R1	Roll Up	23x35	30X45x24.25	18.9 CU FT
R3	Roll Up	43x35	50x45x24.25	31.8 CU FT
Rear Compartmentation				
Compt	Doors	Opening Dimensions	Inside Dimensions	Volume
A1	Roll Up	41x26	48x36x22.25	22.3 CU FT

Total Volume
171 CU Ft

HALE QMAX-1500 GPM SS
750 GAL WATER

LADDER RACK
24' 2 SEC
14' ROOF
10' FOLDING

FENDER STORAGE
LFF: DOUBLE SCBA
LRF: SINGLE SCBA
RFF: DOUBLE SCBA
RRF: DOUBLE SCBA

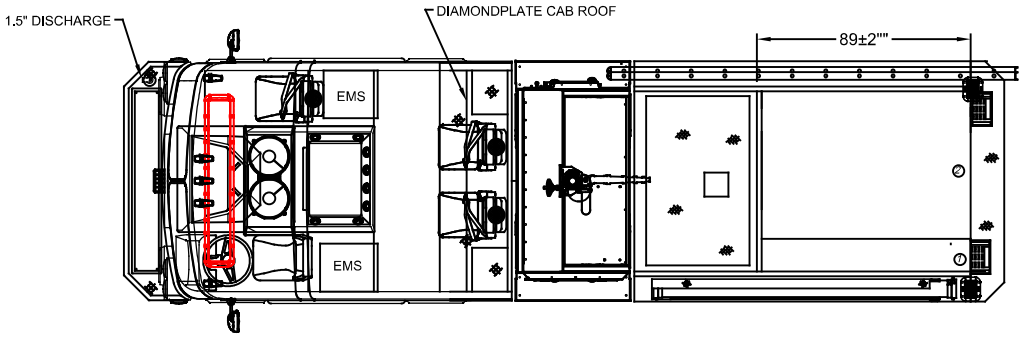

Hose Load
1:400ft of 2-1/2"
2: 200ft of 2"
3:1500ft of 5"
4: Fast Board

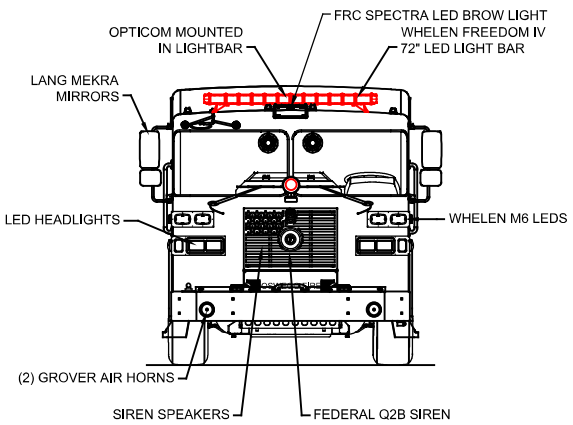

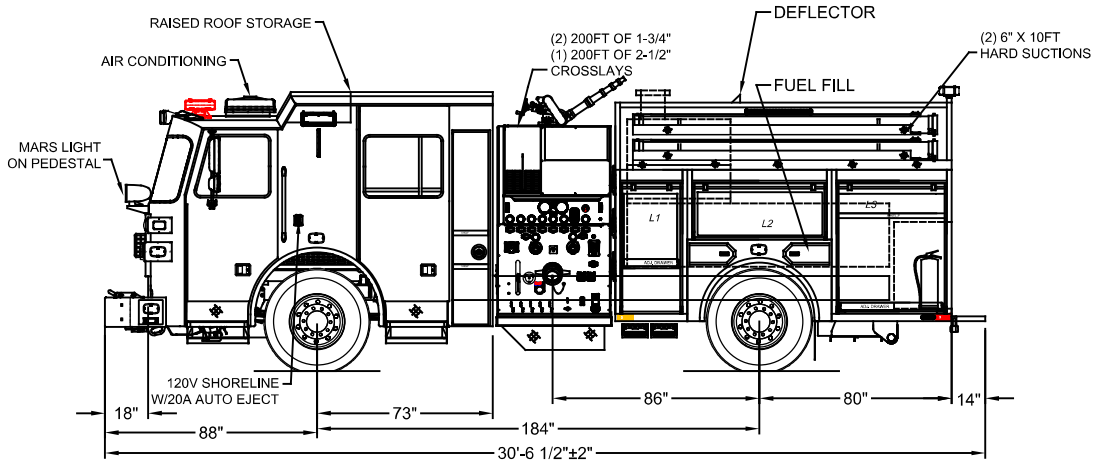

DIMENSIONS SHOWN ON THIS DRAWING ARE APPROXIMATE AND ARE SUBJECT TO MINOR DEVIATIONS DURING CONSTRUCTION.

IN THE EVENT OF A DISCREPANCY BETWEEN THE SUTPHEN SPECIFICATIONS AND DRAWING, THE SUTPHEN SPECIFICATIONS SHALL PREVAIL.

DRAWING IS FOR REFERENCE ONLY. SOME ITEMS PROPOSED MAY NOT BE SHOWN OR NOTED.

CUSTOMER APPROVAL

NAME: _____

TITLE: _____

DATE: _____

REV.	DESCRIPTION	BY	DATE
F,G,H	CHANGE CAB EXTERIOR COMPTS., SHELVING IN L1, L3, R1, ADD PIKE POLE TUBES, ADD LEFT REAR DISCHARGE / CLARIFICATIONS	SED	5/5/25 - 6/10/25
E	CHANGE EXTINGUISHER TRAY LOCATION	SED	4/2/25
B	CHANGE LADDER RACK	SED	12/18/23
A	CHANGES FROM PRE-CON	SED	9/29/23

THIS PRINT IS PROVIDED ON A RESTRICTED BASIS AND IS NOT TO BE USED IN ANY WAY DETRIMENTAL TO THE INTEREST OF SUTPHEN CORPORATION.

DRAWN BY: S.DORFMAN
DATE: 8/10/23
MFG. FACILITY: EAST

SUTPHEN

CITY OF OSWEGO FIRE DEPARTMENT
OSWEGO, NY

CUSTOM PUMPER - S1

DWG. NO. HS-7369-37