COMPT	DOORS	OPENING DIMENSIONS	INSIDE DIMENSIONS	VOLUME
L1	ROLL-UP	23.25"W x 49.50"H	29.75"W x 59.00"H x 17.75"D	18.02 CU. FT.
L2	ROLL-UP	53.25"W x 19.50"H	60.00"W x 28.25"H x 17.75"D	17.41 CU. FT.
L3	ROLL-UP	18.25"W x 49.50"H	24.75"W x 59.00"H x 17.75"D	14.99 CU. FT.
L4	ROLL-UP	43.25"W x 49.50"H	47.25"W x 59.00"H x 17.75"D	28.63 CU. FT.
A1	ROLL-UP	44.50"W x 20.50"H	53.00"W x 29.75"H X 47.75"D	43.57 CU. FT.
H1F	HINGED	18.00"W x 31.00"H	22.00"W x 32.62"H X 23.40"D	9.71 CU. FT.
H1R	HINGED	17.00"W x 31.00"H	21.00"W x 32.62"H X 23.40"D	9.27 CU. FT.

COMPT	DOORS	OPENING DIMENSIONS	INSIDE DIMENSIONS	VOLUME
R1	ROLL-UP	23.25"W x 35.00"H	29.75"W x 45.00"H x 22.75"D	17.62 CU. FT.
R2	HINGED	50.00"W x 9.25"H	60.00"W x 14.00"H x 22.75"D	11.05 CU. FT.
R3	ROLL-UP	18.25"W x 35.00"H	22.75"W x 45.00"H x 22.75"D	13.47 CU. FT.
R4	ROLL-UP	43.25"W x 35.00"H	47.25"W X 45.00"H x 22.75"D	27.99 CU. FT.
			TOTAL VOLUME	211.73 CU. FT.

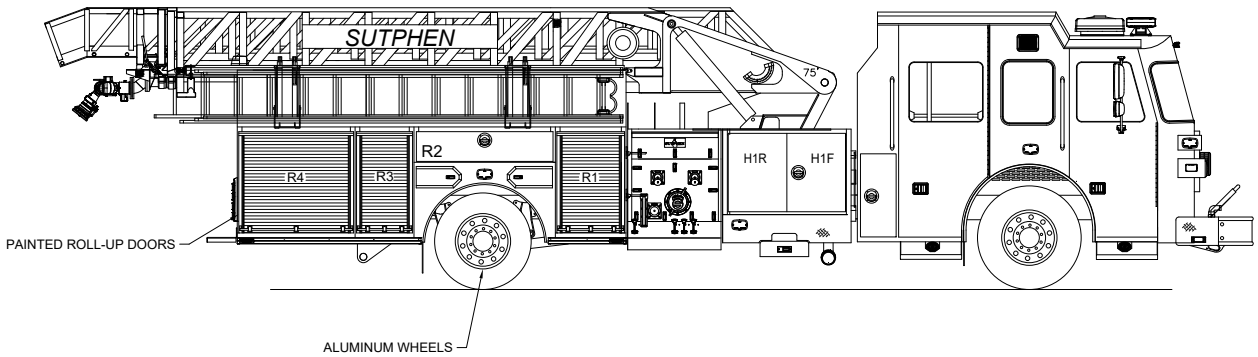

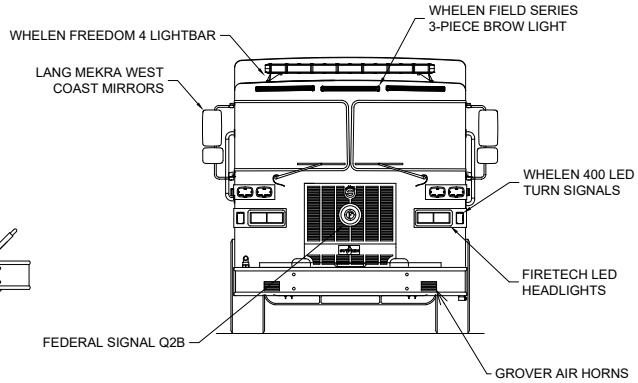

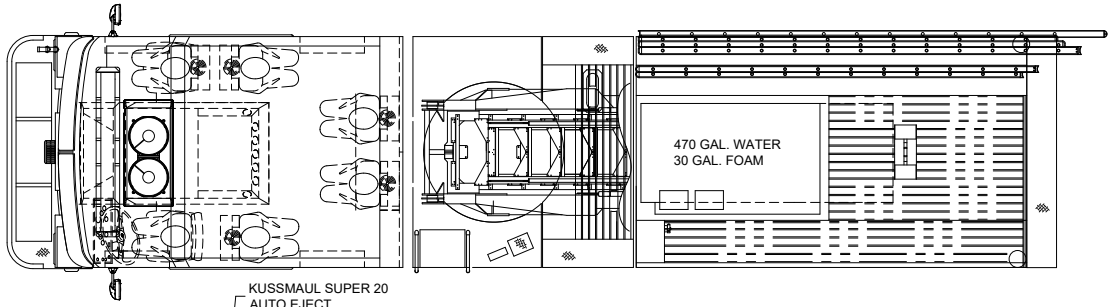

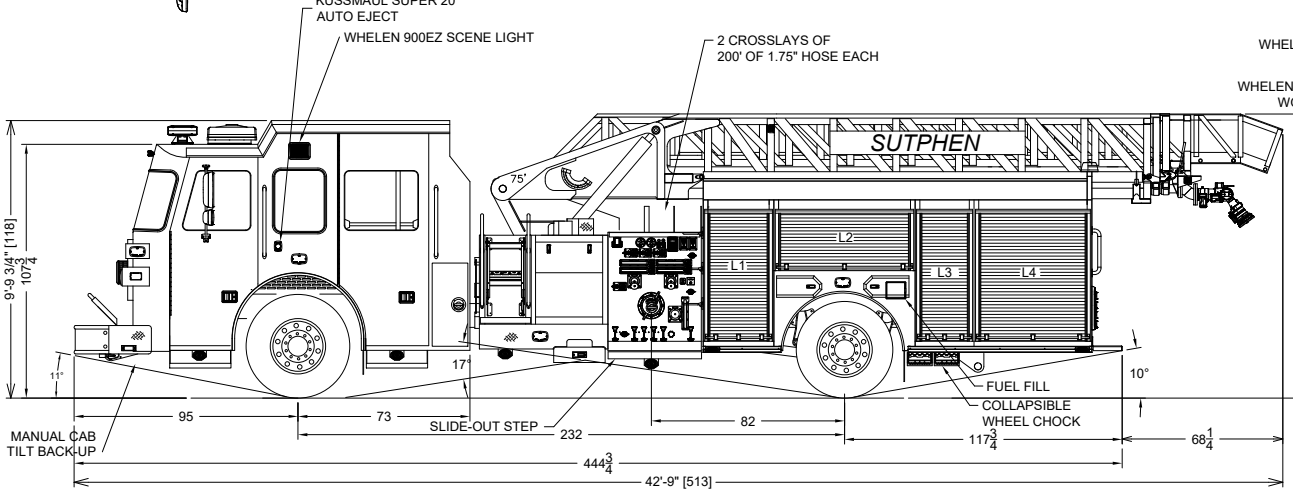

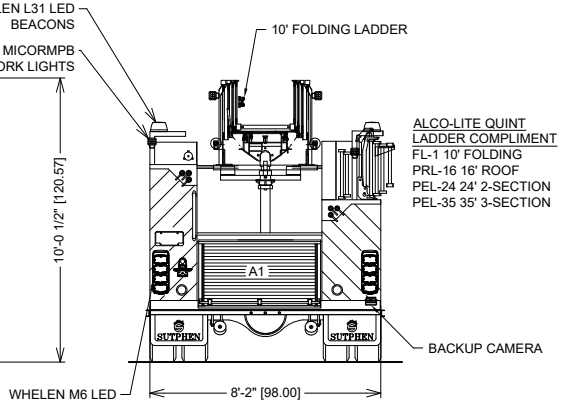

DIMENSIONS SHOWN ON THIS DRAWING ARE APPROXIMATE AND ARE SUBJECT TO MINOR DEVIATIONS DURING CONSTRUCTION.

IN THE EVENT OF A DISCREPANCY BETWEEN THE SUTPHEN SPECIFICATIONS AND DRAWING, THE SUTPHEN SPECIFICATIONS SHALL PREVAIL.

DRAWING IS FOR REFERENCE ONLY. SOME ITEMS PROPOSED MAY NOT BE SHOWN OR NOTED.

CUSTOMER APPROVAL

NAME:

TITLE:

DATE:

REV.	DESCRIPTION	BY	DATE
-	-	-	-

THIS PRINT IS PROVIDED ON A RESTRICTED BASIS AND IS NOT TO BE USED IN ANY WAY DETRIMENTAL TO THE INTEREST OF SUTPHEN CORPORATION.

DRAWN BY: SJG

DATE: 11/24/2025

MFG. FACILITY: HILLIARD

SUTPHEN

SUTPHEN CORPORATION
AMLIN, OH

SL75

DWG. NO.: HS-XXXX