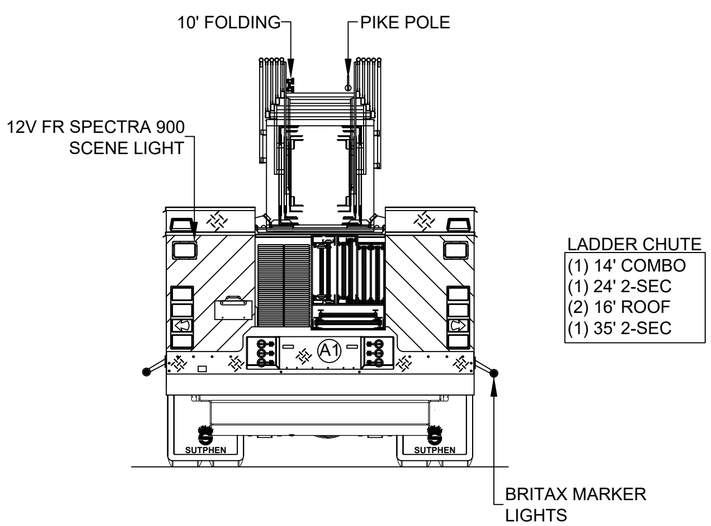

LADDER CHUTE
(1) 14' COMBO
(1) 24' 2-SEC
(2) 16' ROOF
(1) 35' 2-SEC

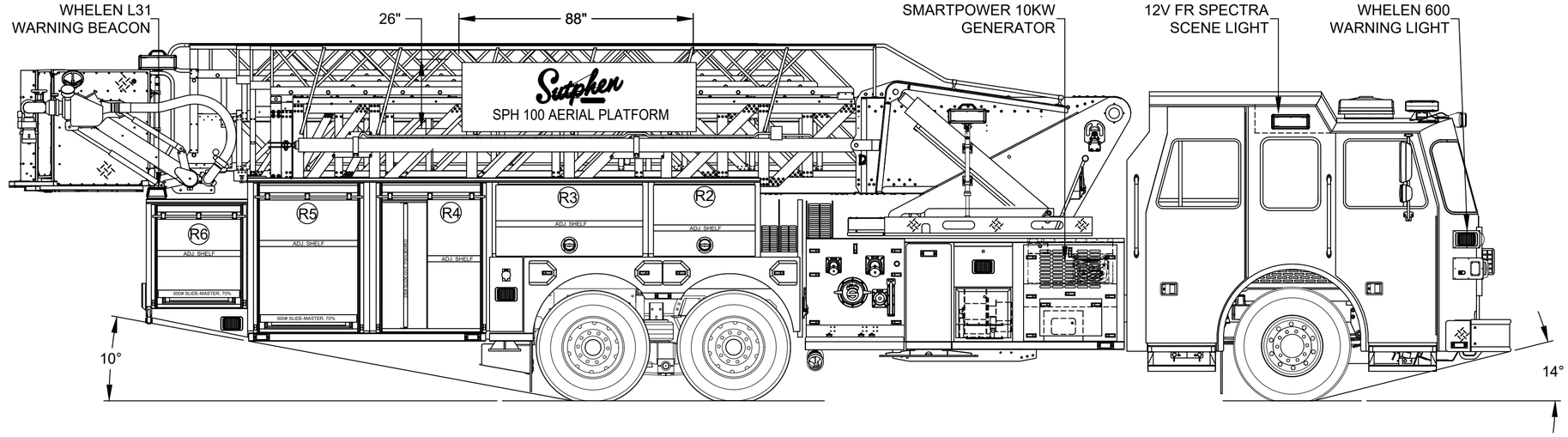

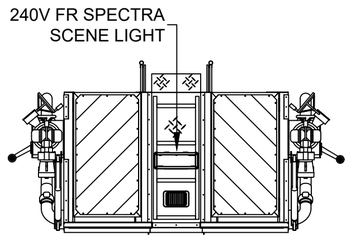

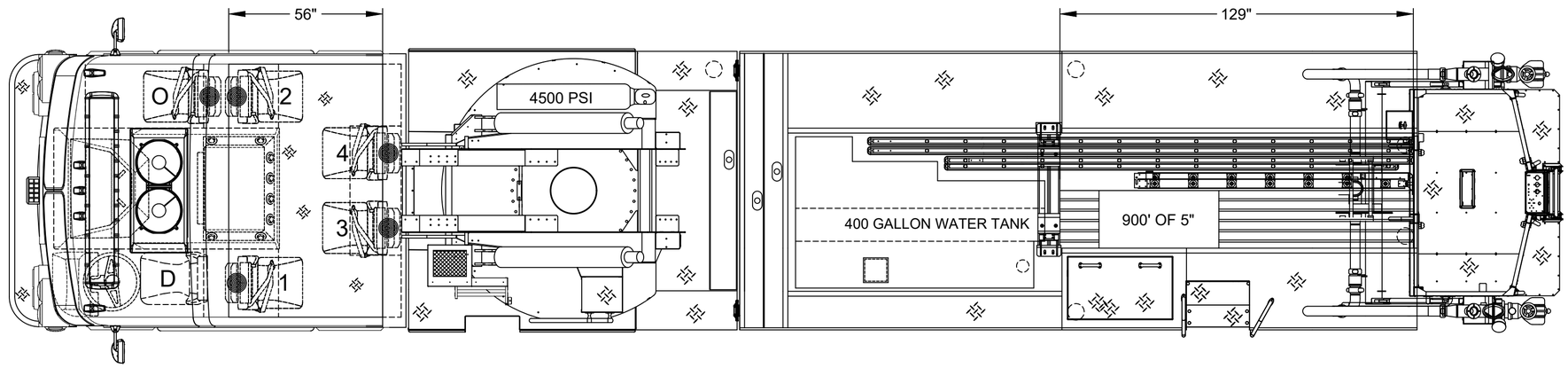

SINGLE TONE CAB
RED

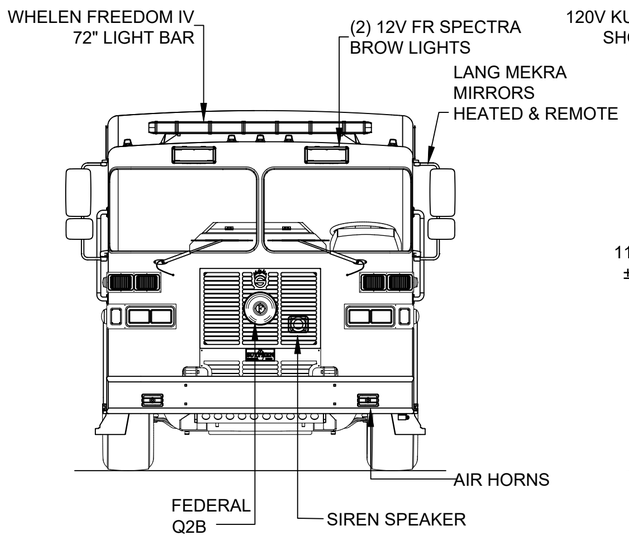

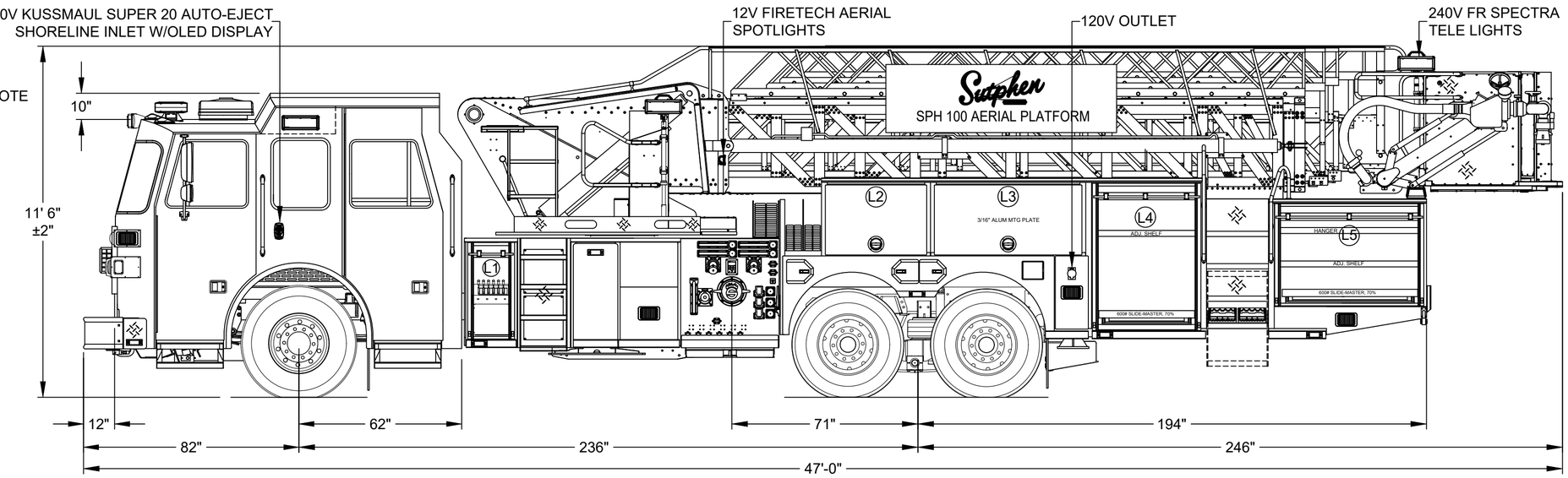

DOOR OPENINGS / COMPARTMENT DIMENSIONS

COMPT.	HEIGHT	WIDTH	HEIGHT	WIDTH	DEPTH
L1	31 13/16	13 7/16	38 1/2	20 5/16	19 7/8
L2	23	33 1/4	27 1/2	41 1/2	12 1/8
L3	23	50 1/4	27 1/2	58	12 1/8
L4	48 1/2	38 3/4	56 1/2	45 3/4	26 1/2
L5	40 1/2	15 1/8	48 1/2	22	26 1/2
L6	32 1/8	30 7/8	40 1/8	34 3/4	26 1/2

DOOR OPENINGS / COMPARTMENT DIMENSIONS

COMPT.	HEIGHT	WIDTH	HEIGHT	WIDTH	DEPTH
R1	31 13/16	33 7/16	38 1/2	40	8 1/2 LOWER 10" 27 1/2 UPPER 28 1/2"
R2	23	33 1/4	27 1/2	41 1/2	26 1/2
R3	23	50 1/4	27 1/2	58	26 1/2
R4	48 1/2	38 3/4	56 1/2	45 3/4	26 1/2
R5	48 1/2	38 3/4	56 1/2	45 3/4	26 1/2
R6	32 1/8	30 7/8	40 1/8	34 3/4	26 1/2

DOOR OPENINGS / COMPARTMENT DIMENSIONS

COMPT.	HEIGHT	WIDTH	HEIGHT	WIDTH	DEPTH
A1	9 1/8	24 1/2	9 7/8	26	88

TOTAL COMPARTMENT VOLUME - 283.49 CU.FT.

DIMENSIONS SHOWN ON THIS DRAWING ARE APPROXIMATE AND ARE SUBJECT TO MINOR DEVIATIONS DURING CONSTRUCTION.

IN THE EVENT OF A DISCREPANCY BETWEEN THE SUTPHEN SPECIFICATIONS AND DRAWING, THE SUTPHEN SPECIFICATIONS SHALL PREVAIL.

DRAWING IS FOR REFERENCE ONLY. SOME ITEMS PROPOSED MAY NOT BE SHOWN OR NOTED.

CUSTOMER APPROVAL

NAME:

TITLE:

DATE:

REV.	DESCRIPTION	BY	DATE
A	REV-A SHOP ORDER RELEASE	AM	7/10/2025

THIS PRINT IS PROVIDED ON A RESTRICTED BASIS AND IS NOT TO BE USED IN ANY WAY DETRIMENTAL TO THE INTEREST OF SUTPHEN CORPORATION.

DRAWN BY: R.MILLER

DATE: 05/29/24

MFG. FACILITY: DUBLIN

SUTPHEN

DEMO 631
DUBLIN, OH

SPH100 AERIAL PLATFORM

DWG. NO.: HS-8340