COMPT	DOORS	OPENING DIMENSIONS	INSIDE DIMENSIONS	VOLUME
L1	ROLL-UP	23.25"W x 49.50"H	29.75"W x 58.00"H x 17.75"D	18.02 CU. FT.
L2	ROLL-UP	53.25"W x 20.50"H	60.00"W x 28.25"H x 17.75"D	17.41 CU. FT.
L3	ROLL-UP	40.00"W x 49.50"H	44.75"W x 58.00"H x 17.75"D	27.12 CU. FT.
L4	ROLL-UP	43.25"W x 49.50"H	47.25"W x 57.00"H x 17.75"D	27.56 CU. FT.
A1	ROLL-UP	44.50"W x 22.50"H	53.00"W x 27.75"H X 48.00"D	40.85 CU. FT.
H1 FRONT	ROLL-UP	18.00"W x 31.00"H	22.00"W x 32.62"H X 23.40"D	9.71 CU. FT.
H1 REAR	ROLL-UP	17.00"W x 31.00"H	21.00"W x 32.62"H X 23.40"D	9.27 CU. FT.

COMPT	DOORS	OPENING DIMENSIONS	INSIDE DIMENSIONS	VOLUME
R1 UPPER	ROLL-UP	23.25"W x 20.50"H	29.75"W x 29.19"H x 12.00"D	6.01 CU. FT.
R1 LOWER	ROLL-UP	23.25"W x 28.25"H	29.75"W x 30.00"H x 22.75"D	11.81 CU. FT.
R2	ROLL-UP	53.25"W x 20.50"H	60.00"W x 28.25"H x 12.00"D	11.77 CU. FT.
R3 UPPER	ROLL-UP	40.00"W x 19.50"H	44.75"W x 29.19"H x 12.00"D	9.05 CU. FT.
R3 LOWER	ROLL-UP	40.00"W x 28.25"H	44.75"W x 30.00"H x 22.75"D	17.77 CU. FT.
R4 UPPER	ROLL-UP	43.25"W x 20.50"H	47.25"W x 29.19"H x 12.00"D	9.55 CU. FT.
R4 LOWER	ROLL-UP	43.25"W x 28.25"H	47.25"W x 28.00"H x 22.75"D	17.51 CU. FT.
			TOTAL VOLUME	233.51 CU. FT.

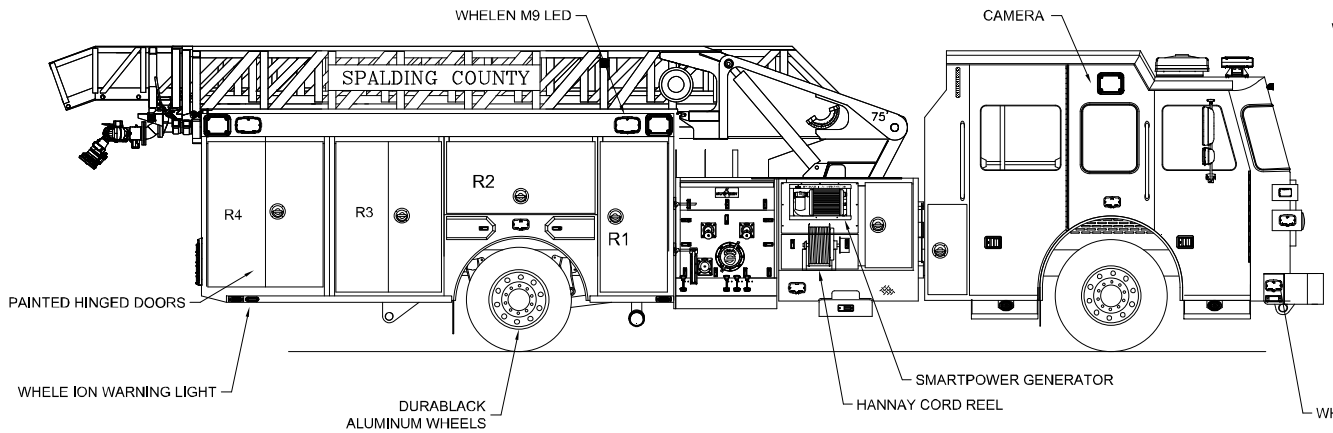

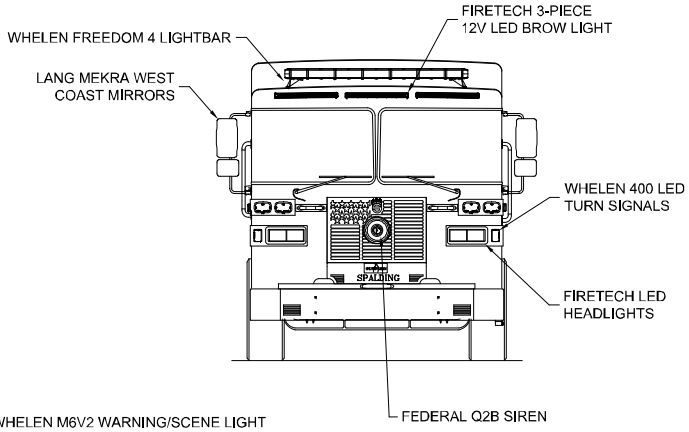

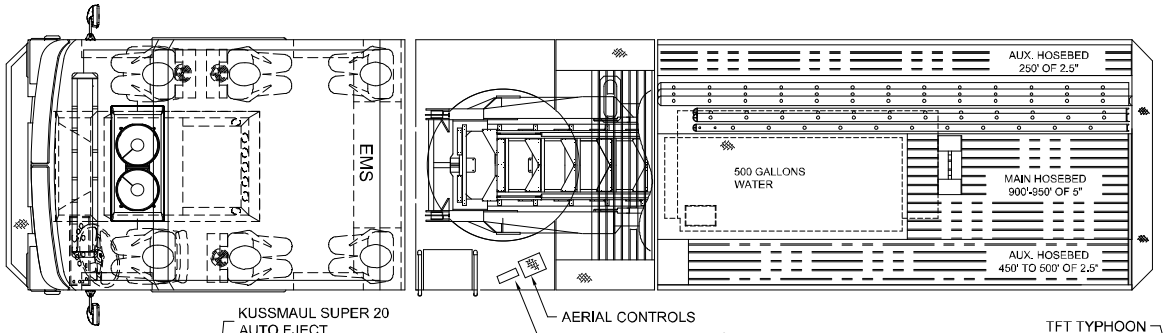

DUO SAFETY CUSTOM
LADDER COMPLIMENT
585-A 10' FOLDING (FLY SECTION)
775-A 14' ROOF (LADDER CHUTE)
875-A 16' ROOF (BASE SECTION)
900-A 24' 2-SECTION (LADDER CHUTE)
1225-A 35' 3-SECTION (LADDER CHUTE)

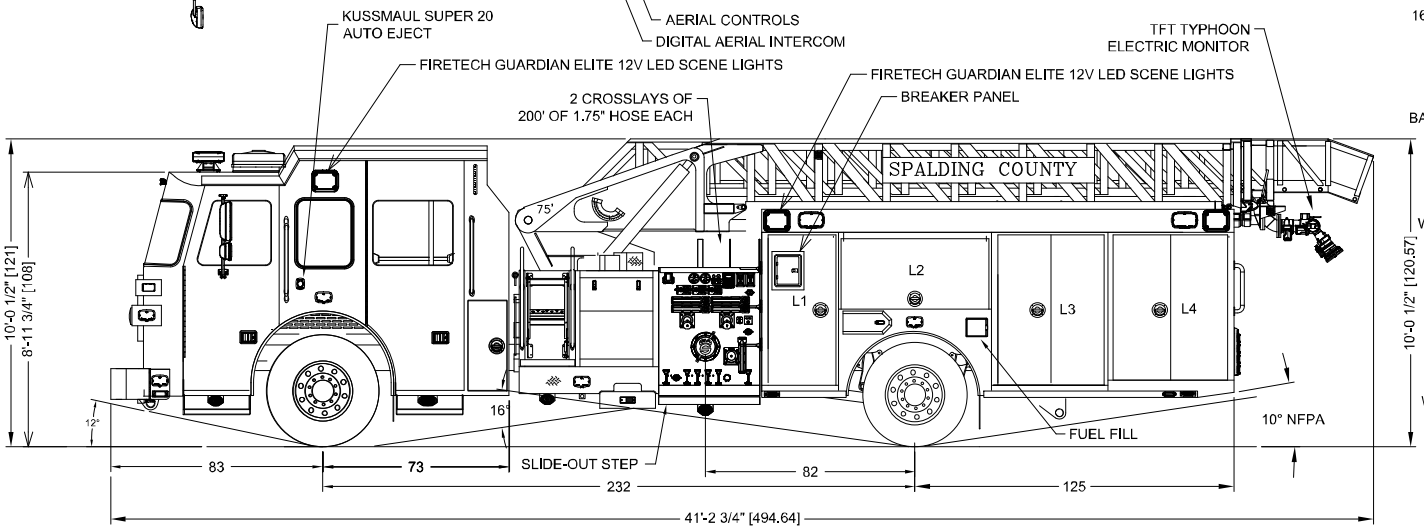

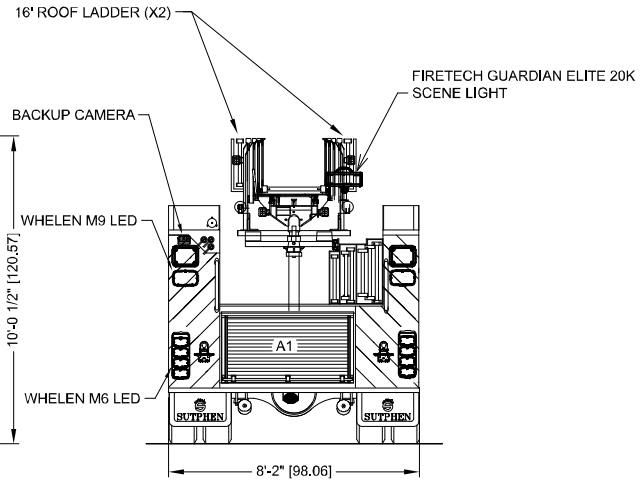

DIMENSIONS SHOWN ON THIS DRAWING ARE APPROXIMATE AND ARE SUBJECT TO MINOR DEVIATIONS DURING CONSTRUCTION.

IN THE EVENT OF A DISCREPANCY BETWEEN THE SUTPHEN SPECIFICATIONS AND DRAWING, THE SUTPHEN SPECIFICATIONS SHALL PREVAIL.

DRAWING IS FOR REFERENCE ONLY. SOME ITEMS PROPOSED MAY NOT BE SHOWN OR NOTED.

CUSTOMER APPROVAL

NAME:

TITLE:

DATE:

REV.	DESCRIPTION	BY	DATE
A	REVISED AFTER PRE-CONSTRUCTION MEETING	CAM	7/24/2024

THIS PRINT IS PROVIDED ON A RESTRICTED BASIS AND IS NOT TO BE USED IN ANY WAY DETRIMENTAL TO THE INTEREST OF SUTPHEN CORPORATION.

DRAWN BY: SJG
DATE: 2/16/24
MFG. FACILITY: HILLIARD

SUTPHEN

SPALDING COUNTY FIRE DEPARTMENT
GRIFFIN, GA

SL-75

DWG. NO.: HS-8171