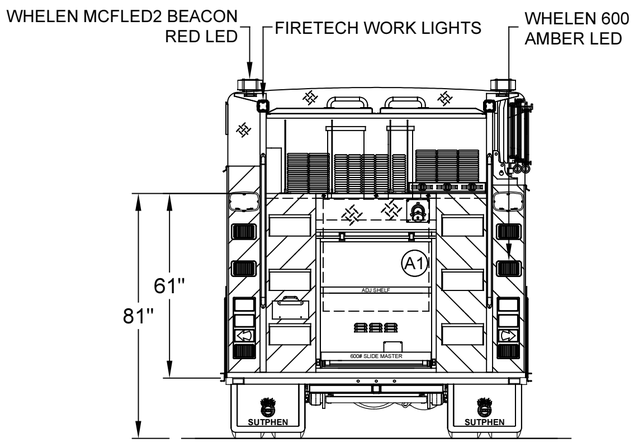

LADDER RACK
24' 2-SEC
14' ROOF
10' FOLDING
(2) PIKE POLE STOR

HOSEBED
FRESNO LADDER STOR
500' OF 4"
800' OF 2.5"
200' OF 2.5"
600' OF 4"
(3) NY ROOF HOOKS

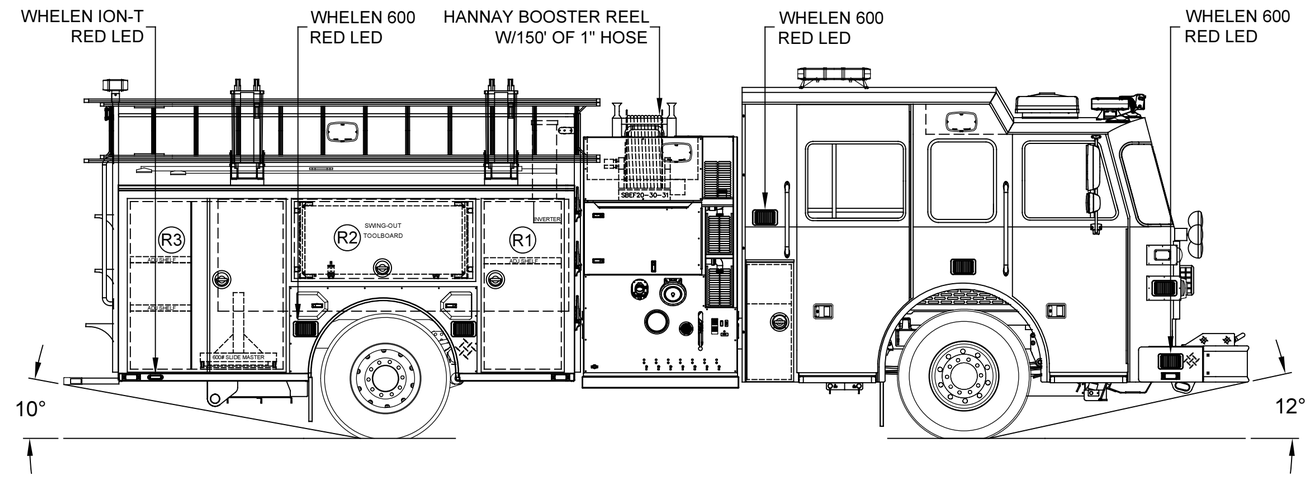

LEFT SIDE COMPARTMENTS					
COMPT	DOORS	OPENING DIMENSIONS	INSIDE DIMENSIONS	VOLUME	
L1	SINGLE	23.5"w X 58.4"h	31.1"w X 66"h X 27.3"d	29.4 CU. FT.	(10"h X 10.5"d UPPER)
L2	LIFT-UP	55"w X 31.9"h	61.6"w X 36.8"h X 27.3"d	29.8 CU. FT.	(10"h X 10.5"d UPPER)
L3	DOUBLE	48.5"w X 58.4"h	53.4"w X 66"h X 27.3"d	50.5 CU. FT.	(10"h X 10.5"d UPPER)

RIGHT SIDE COMPARTMENTS					
COMPT	DOORS	OPENING DIMENSIONS	INSIDE DIMENSIONS	VOLUME	
R1	SINGLE	23.5"w X 52.4"h	31.1"w X 60"h X 27.3"d	28.3 CU. FT.	(4"h X 10.5"d UPPER)
R2	LIFT-UP	55"w X 25.9"h	61.6"w X 30.8"h X 27.3"d	27.6 CU. FT.	(4"h X 10.5"d UPPER)
R3	DOUBLE	48.5"w X 52.4"h	53.4"w X 60"h X 27.3"d	48.5 CU. FT.	(4"h X 10.5"d UPPER)

REAR STEP COMPARTMENT				
COMPT	DOORS	OPENING DIMENSIONS	INSIDE DIMENSIONS	VOLUME
A1	ROLL-UP	37.5"w X 32.8"h	49"h X 40"w X 31"d	35.2 CU. FT.
			TOTAL:	249.3 CU.FT.

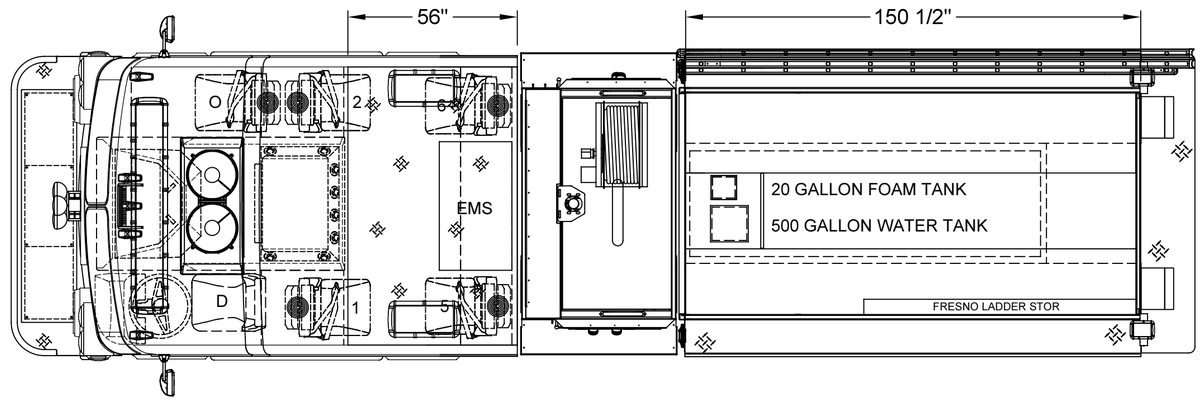

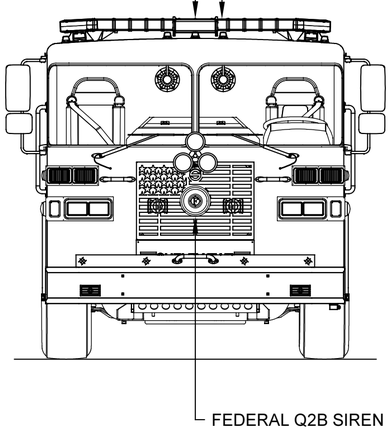

TWO TONE CAB
PAINT BREAK OPTION #1
WHITE OVER RED

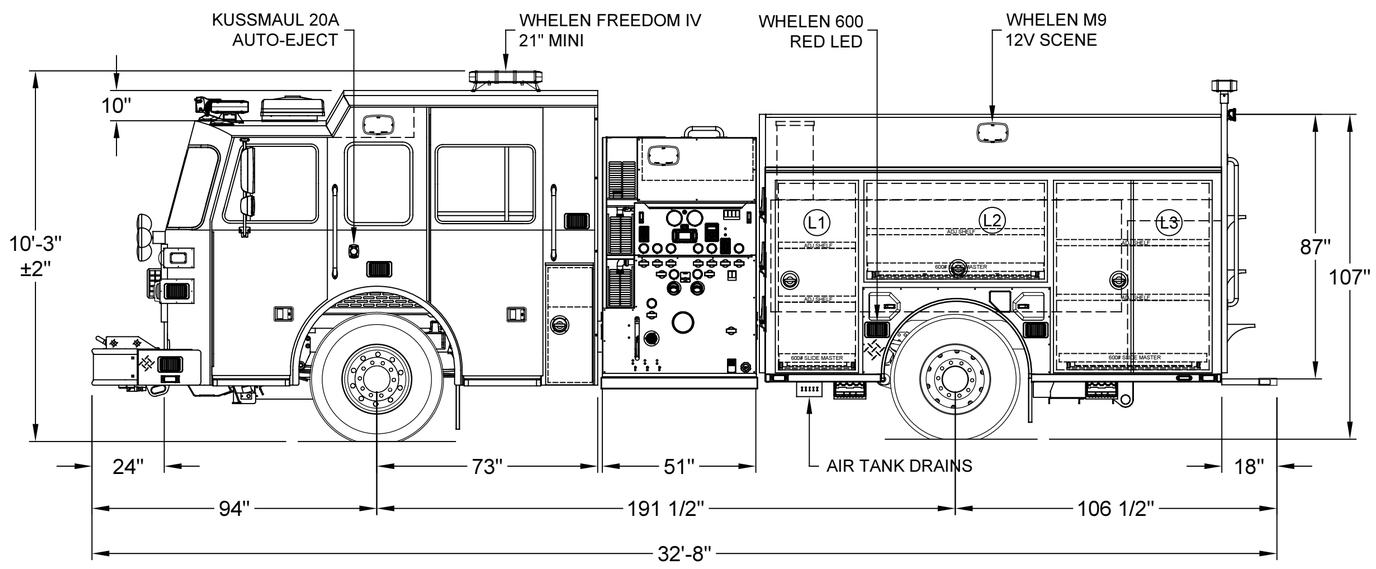

DIMENSIONS SHOWN ON THIS DRAWING ARE APPROXIMATE AND ARE SUBJECT TO MINOR DEVIATIONS DURING CONSTRUCTION.

IN THE EVENT OF A DISCREPANCY BETWEEN THE SUTPHEN SPECIFICATIONS AND DRAWING, THE SUTPHEN SPECIFICATIONS SHALL PREVAIL.

DRAWING IS FOR REFERENCE ONLY. SOME ITEMS PROPOSED MAY NOT BE SHOWN OR NOTED.

CUSTOMER APPROVAL

NAME: _____

TITLE: _____

DATE: _____

REV.	DESCRIPTION	BY	DATE
A	**REV-A** SHOP ORDER	ML	08/07/23

THIS PRINT IS PROVIDED ON A RESTRICTED BASIS AND IS NOT TO BE USED IN ANY WAY DETRIMENTAL TO THE INTEREST OF SUTPHEN CORPORATION.

DRAWN BY: M.LUSCHER

DATE: 04/18/23

MFG. FACILITY: DUBLIN

SUTPHEN

SHELBY TOWNSHIP FIRE DEPARTMENT
SHELBY TWP, MI

CUSTOM PUMPER - S4

DWG. NO.: HS-7818