COMPT	DOORS	INSIDE DIMENSIONS	VOLUME
L1	HINGED	29.75"W x 59.00"H x 17.75"D	18.02 CU. FT.
L2	HINGED	60.00"W x 28.25"H x 17.75"D	17.41 CU. FT.
L3	HINGED	44.75"W x 59.00"H x 17.75"D	27.12 CU. FT.
L4	HINGED	47.25"W x 57.00"H x 17.75"D	27.66 CU. FT.
A1	ROLL-UP	53.00"W x 27.75"H X 48.00"D	40.85 CU. FT.
H1 FRONT	HINGED	22.00"W x 32.62"H X 23.40"D	9.71 CU. FT.
H1 REAR	HINGED	21.00"W x 32.62"H X 23.40"D	9.27 CU. FT.

COMPT	DOORS	INSIDE DIMENSIONS	VOLUME
R1 UPPER	ROLL-UP	29.75"W x 29.19"H x 12.00"D	6.01 CU. FT.
R1 LOWER	ROLL-UP	29.75"W x 30.00"H x 22.75"D	11.81 CU. FT.
R2	ROLL-UP	60.00"W x 28.25"H x 12.00"D	11.77 CU. FT.
R3 UPPER	ROLL-UP	44.75"W x 29.19"H x 12.00"D	9.05 CU. FT.
R3 LOWER	ROLL-UP	44.75"W x 30.00"H x 22.75"D	17.77 CU. FT.
R4 UPPER	ROLL-UP	47.25"W x 29.19"H x 12.00"D	9.55 CU. FT.
R4 LOWER	ROLL-UP	47.25"W x 28.00"H x 22.75"D	17.51 CU. FT.
TOTAL VOLUME			233.51 CU. FT.

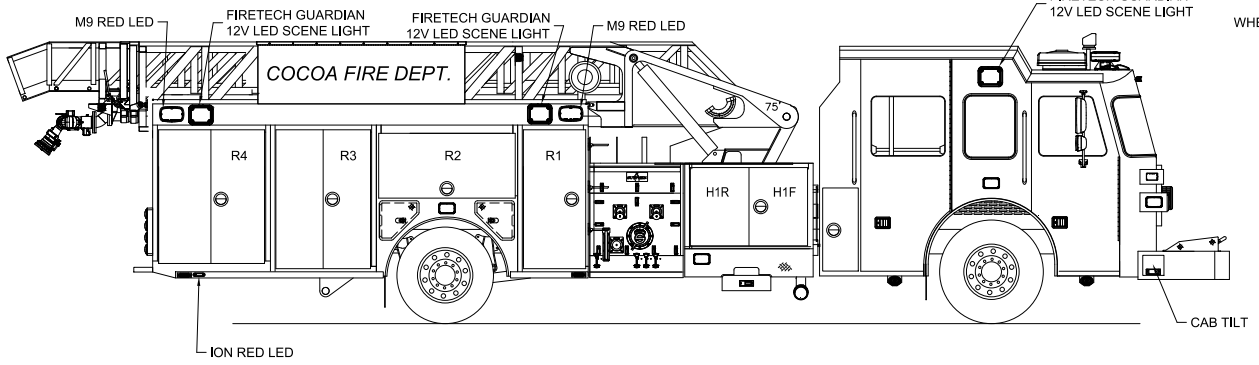

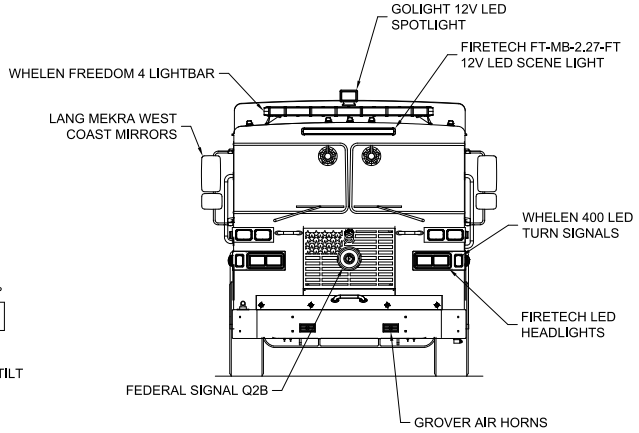

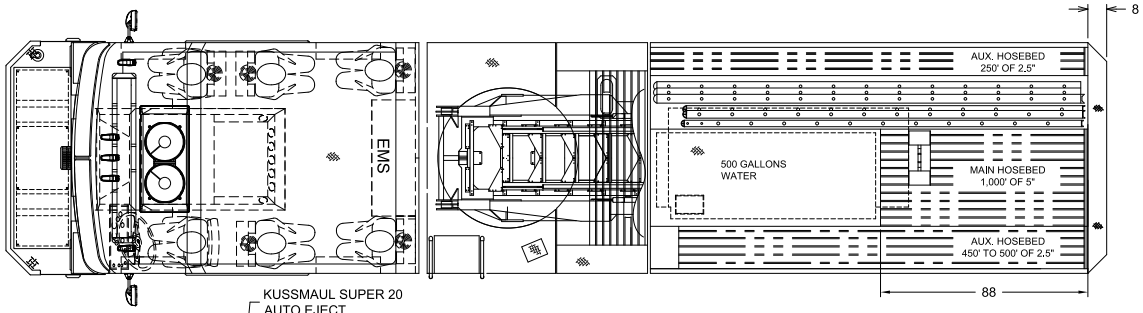

DUO SAFETY
LADDER COMPLIMENT
10' FOLDING (AERIAL)
14' ROOF (LADDER CHUTE)
24' 2-SECTION (LADDER CHUTE)
35' 3-SECTION (LADDER CHUTE)

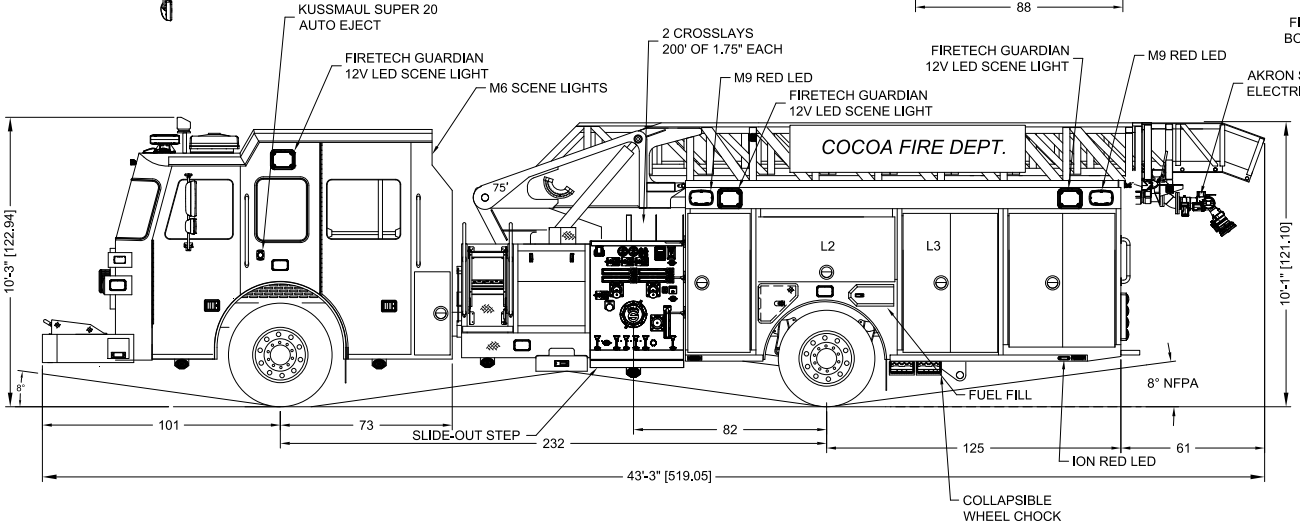

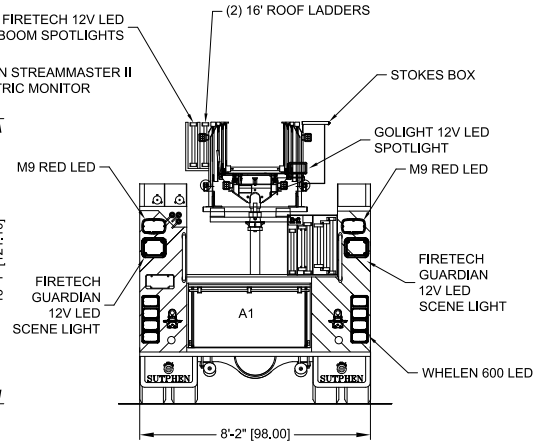

DIMENSIONS SHOWN ON THIS DRAWING ARE APPROXIMATE AND ARE SUBJECT TO MINOR DEVIATIONS DURING CONSTRUCTION.

IN THE EVENT OF A DISCREPANCY BETWEEN THE SUTPHEN SPECIFICATIONS AND DRAWING, THE SUTPHEN SPECIFICATIONS SHALL PREVAIL.

DRAWING IS FOR REFERENCE ONLY. SOME ITEMS PROPOSED MAY NOT BE SHOWN OR NOTED.

CUSTOMER APPROVAL

NAME:

TITLE:

DATE:

REV.	DESCRIPTION	BY	DATE

THIS PRINT IS PROVIDED ON A RESTRICTED BASIS AND IS NOT TO BE USED IN ANY WAY DETRIMENTAL TO THE INTEREST OF SUTPHEN CORPORATION.

DRAWN BY: APF

DATE: 2/13/24

MFG. FACILITY: HILLIARD

SUTPHEN

CITY OF COCOA
COCOA, FL

SL75

DWG. NO.: HS-7920