COMPT	DOORS	OPENING DIMENSIONS	INSIDE DIMENSIONS	VOLUME
L1	ROLL-UP	16.75"W x 18.75"H	HYDRAULICS & WHEELCHOCKS	N/A
L2	HINGED	32.75"W x 24.00"H	41.25"W x 28.25"H x 12"D	8.09 CU. FT.
L3	HINGED	49.25"W x 24.00"H	57.75"W x 28.25"H x 12"D	11.33 CU. FT.
L4	ROLL-UP	31.25"W x 43.00"H	37.75"W x 52.50"H x 26.50"D	30.39 CU. FT.
L5	ROLL-UP	39.00"W x 43.00"H	45.50"W x 52.50"H X 26.50"D	36.63 CU. FT.
L6	ROLL-UP	16.00"W x 37.75"H	22.50"W x 47.25"H X 26.50"D	16.30 CU. FT.

COMPT	DOORS	OPENING DIMENSIONS	INSIDE DIMENSIONS	VOLUME
R1 UPPER	ROLL-UP	21.5"W x 34.43"H	28.00"W x 26.50"H x 18.50"D	7.94 CU. FT.
R1 LOWER			28.00"W x 9.75"H x 6.90"D	1.09 CU. FT.
R2	HINGED	32.75"W x 18.75"H	41.25"W x 29.34"H x 12.00"D	8.40 CU. FT.
R3	HINGED	49.25"W x 18.75"H	57.75"W x 23.50"H x 12.00"D	9.42 CU. FT.
R4	ROLL-UP	31.25"W x 43.00"H	37.75"W x 52.50"H x 26.50"D	30.39 CU. FT.
R5	ROLL-UP	39.00"W x 43.00"H	45.50"W x 52.50"H X 26.50"D	36.63 CU. FT.
R6	ROLL-UP	16.00"W x 37.75"H	22.50"W x 47.25"H X 26.50"D	16.30 CU. FT.
A1	HINGED	25.00"W x 9.50"H	25.00"W x 9.50"H X 88.00" D	12.09 CU. FT.
			TOTAL VOLUME	245.6 CU. FT.

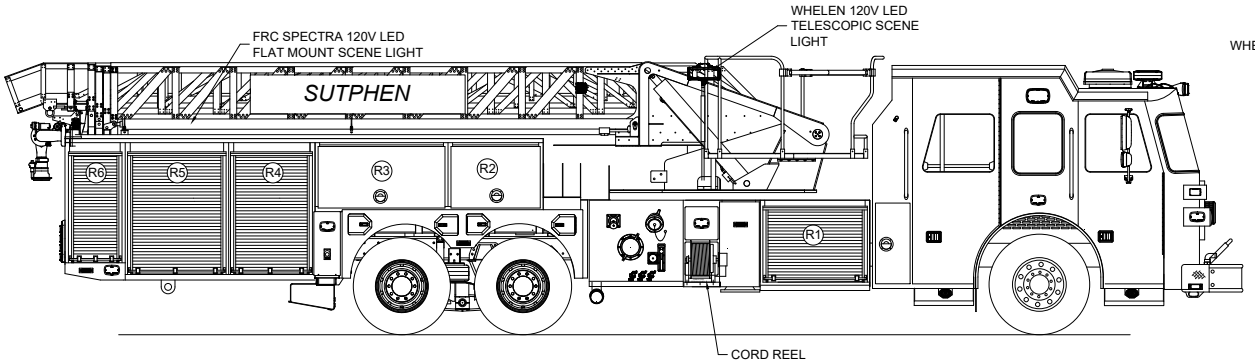

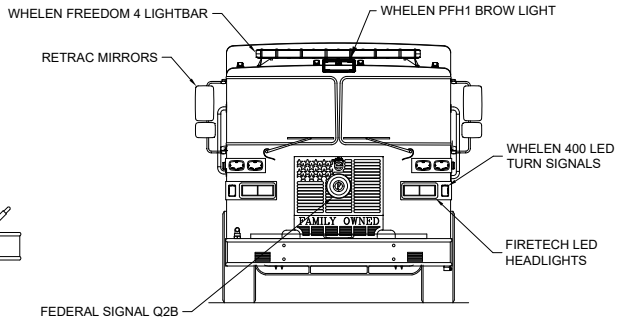

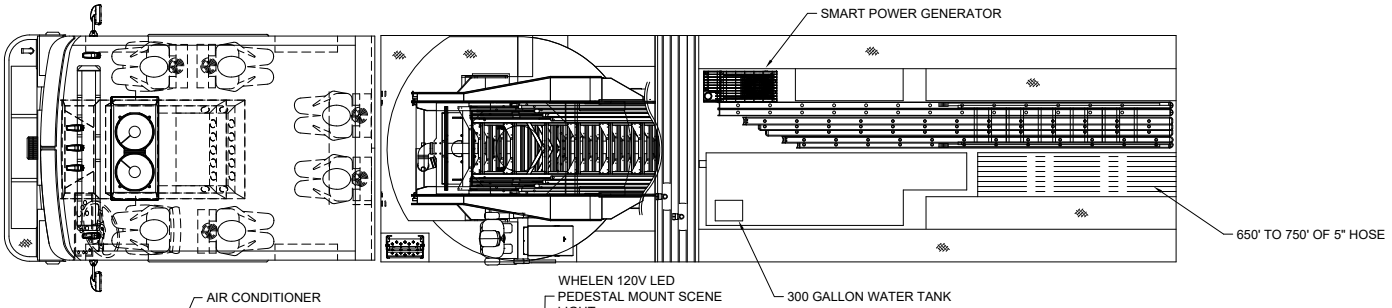

ALCO-LITE AERIAL
LADDER COMPLIMENT
FL-10 10' FOLDING (FLY SECTION OF AERIAL)
PRL-14 14' ROOF
PRL-16 16' ROOF (BASE SECTION OFAERIAL)
PRL-16 16' ROOF
PEL-24 24' 2-SECTION
PEL3-35 35' 3-SECTION

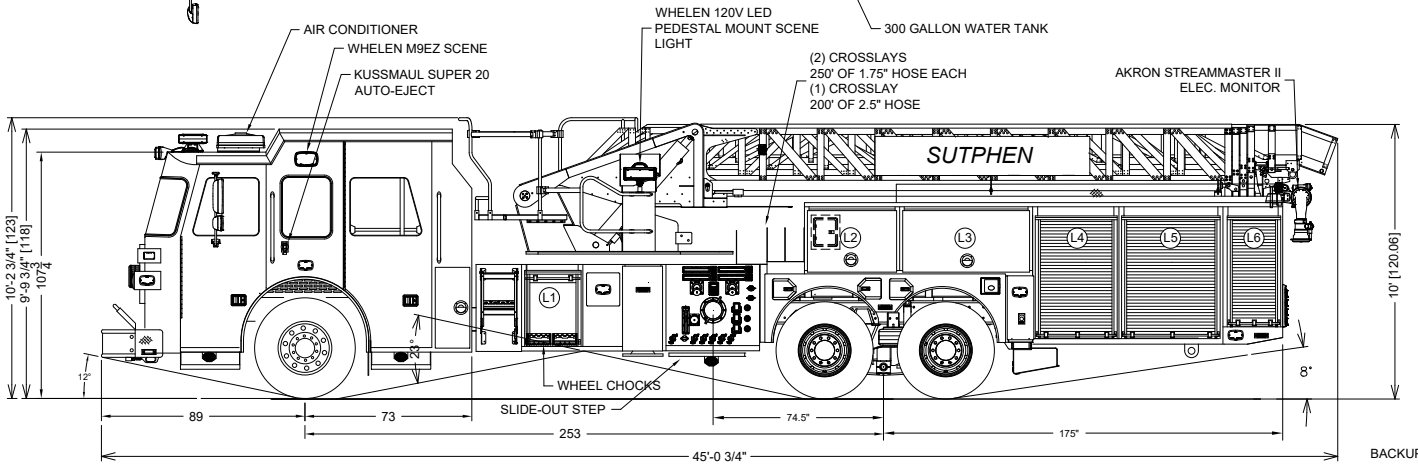

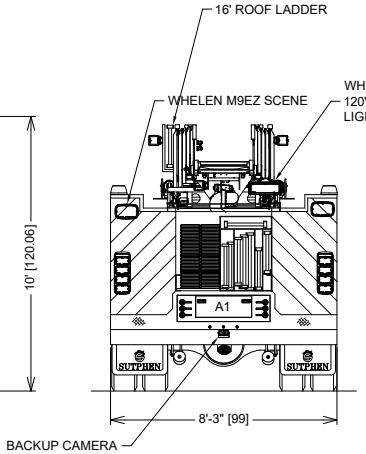

DIMENSIONS SHOWN ON THIS DRAWING ARE APPROXIMATE AND ARE SUBJECT TO MINOR DEVIATIONS DURING CONSTRUCTION.

IN THE EVENT OF A DISCREPANCY BETWEEN THE SUTPHEN SPECIFICATIONS AND DRAWING, THE SUTPHEN SPECIFICATIONS SHALL PREVAIL.

DRAWING IS FOR REFERENCE ONLY. SOME ITEMS PROPOSED MAY NOT BE SHOWN OR NOTED.

CUSTOMER APPROVAL

NAME:

TITLE:

DATE:

REV.	DESCRIPTION	BY	DATE

THIS PRINT IS PROVIDED ON A RESTRICTED BASIS AND IS NOT TO BE USED IN ANY WAY DETRIMENTAL TO THE INTEREST OF SUTPHEN CORPORATION.

DRAWN BY: SJG

DATE: 11/4/25

MFG. FACILITY: HILLIARD

SUTPHEN

SUTPHEN CORPORATION
AMLIN, OH

SL100

DWG. NO.: HS-8535