Hose Load
1:200ft of 2-1/2"
2:200ft of 1 3/4"
3:1200ft of 5"
4:200ft of 1-3/4"
5:200ft of 2-1/2"

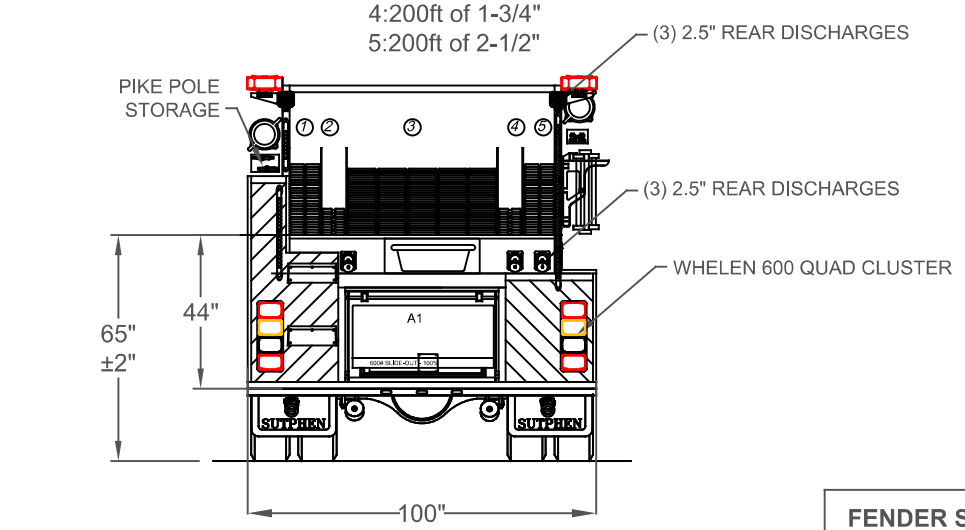

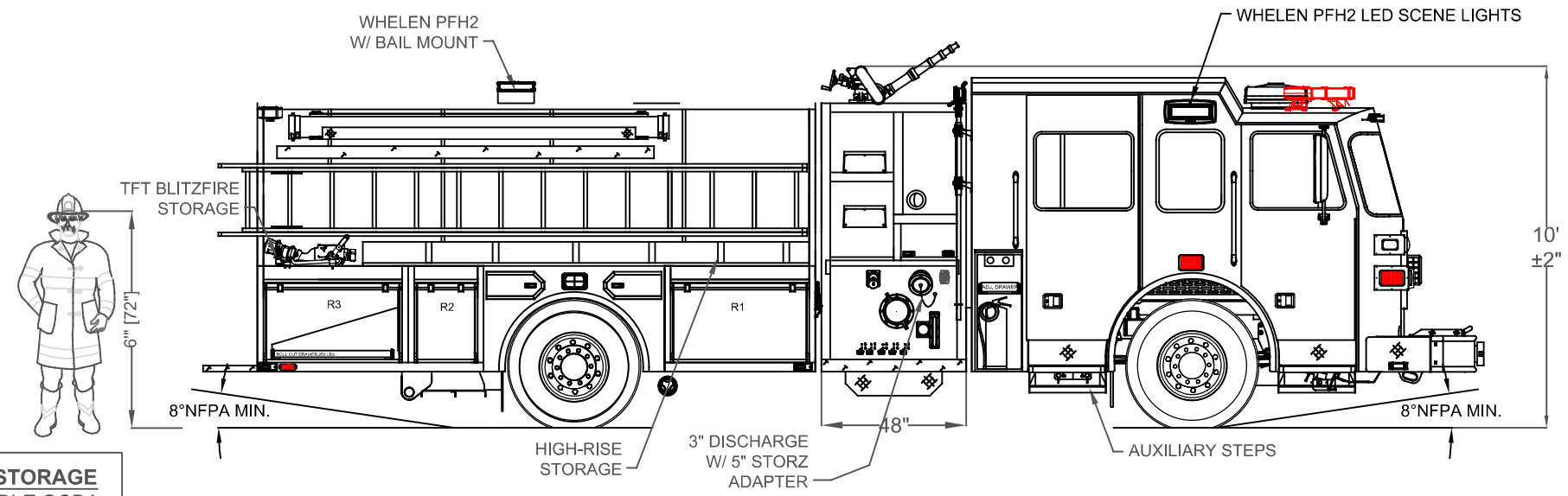

FENDER STORAGE
LFF: DOUBLE SCBA
LRF: SCBA/FUEL
RFF: DOUBLE SCBA
RRF: DOUBLE SCBA

LADDER RACK
28FT 2-SEC
16FT ROOF
10FT ATTIC

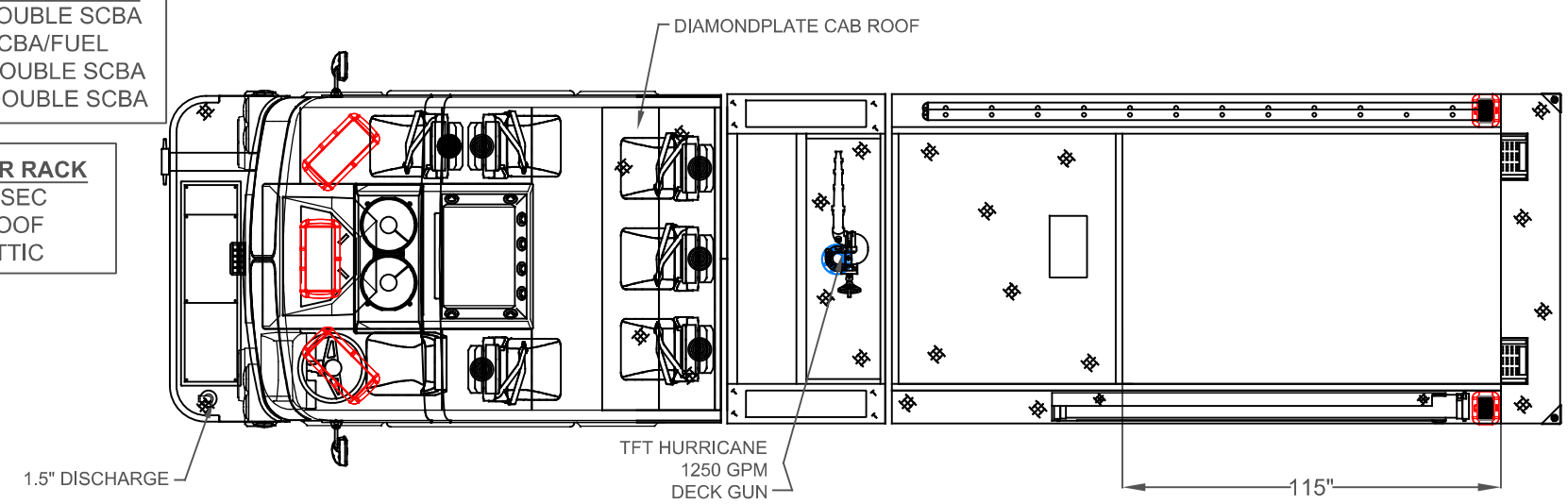

LEFT SIDE COMPARTMENTS				
COMPT	DOORS	OPENING DIMENSIONS	INSIDE DIMENSIONS	VOLUME
L1	ROLL-UP	43"w X 49"h	50"w X 59"h X 24 1/4"/10 1/4"d	30.1 CU. FT.
L2	ROLL-UP	53"w X 18"h	60"w X 28"h X 10 1/4"d	10.0 CU. FT.
L3	ROLL-UP	18"w X 49"h	25"w X 59"h X 24 1/4"/10 1/4"d	15.0 CU. FT.
L4	ROLL-UP	43"w X 49"h	50"w X 59"h X 24 1/4"/10 1/4"d (TRANSVERSE)	30.1 CU. FT.

RIGHT SIDE COMPARTMENTS				
COMPT	DOORS	OPENING DIMENSIONS	INSIDE DIMENSIONS	VOLUME
R1	ROLL-UP	43"w X 21"h	50"w X 31"h X 24 1/4"d	21.8 CU. FT.
R2	ROLL-UP	18"w X 21"h	25"w X 31"h X 24 1/4"d	10.9 CU. FT.
R3	ROLL-UP	43"w X 21"h	50"w X 31"h X 24 1/4"d (TRANSVERSE)	21.8 CU. FT.

REAR STEP COMPARTMENT				
COMPT	DOORS	OPENING DIMENSIONS	INSIDE DIMENSIONS	VOLUME
A1	ROLL-UP	42"w X 26"h	30"h X 48"w X 48"d	40.0 CU. FT.
				TOTAL: 179.5 CU.FT.

Hale Qmax 1750 single stage
Water Tank Capacity 1000 gal
Akron 95 gpm bypass foam system
Off truck foam tank

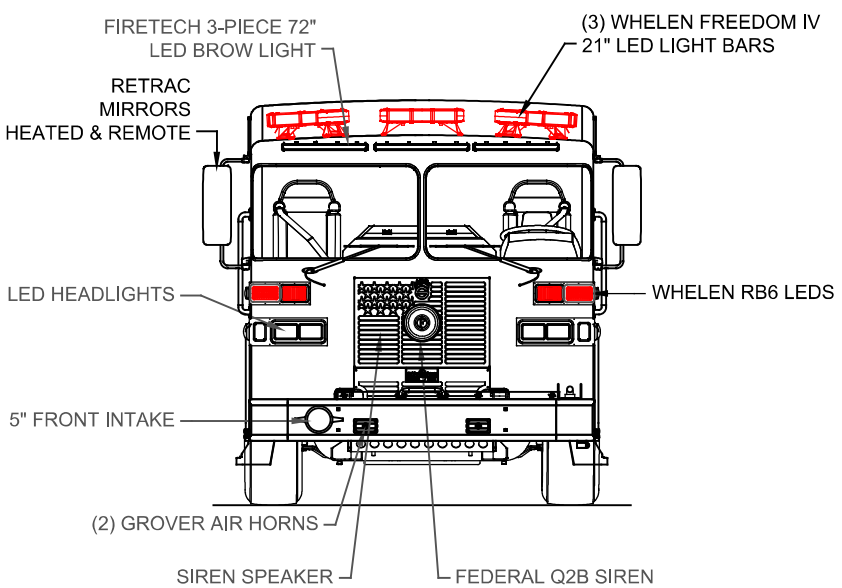

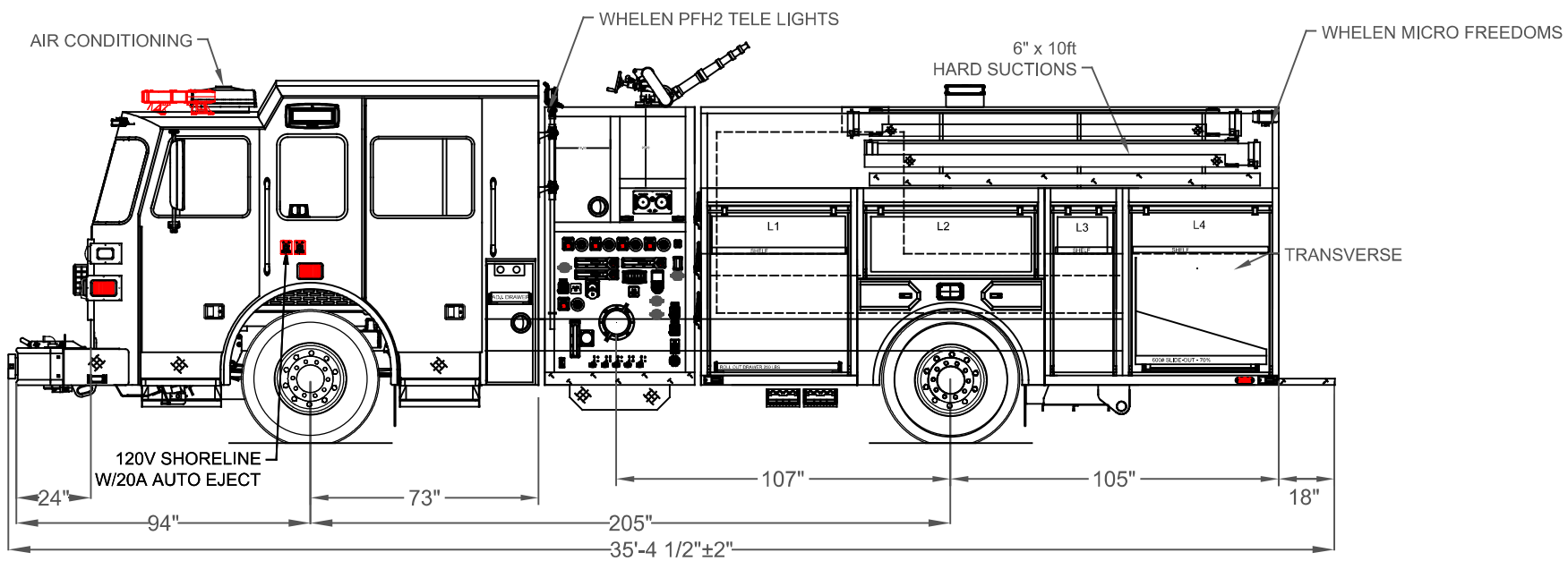

DIMENSIONS SHOWN ON THIS DRAWING ARE APPROXIMATE AND ARE SUBJECT TO MINOR DEVIATIONS DURING CONSTRUCTION.

IN THE EVENT OF A DISCREPANCY BETWEEN THE SUTPHEN SPECIFICATIONS AND DRAWING, THE SUTPHEN SPECIFICATIONS SHALL PREVAIL.

DRAWING IS FOR REFERENCE ONLY. SOME ITEMS PROPOSED MAY NOT BE SHOWN OR NOTED.

CUSTOMER APPROVAL

NAME: _____

TITLE: _____

DATE: _____

6-18-25

REV.	DESCRIPTION	BY	DATE
H/I/J	CHANGE IN AIR COMPRESSOR BRAND / ADDED PUMP PANEL AND CAB CLAIRFICATION NOTES. TIED TRANVSERSE COMPARTMENT LIGHTS TO ACTIVATE WHEN EACH TRANSVERSE COMPARTMENT DOOR IS OPEN/ PAINT INTERMEDIATE STEP RAPTOR BLACK	SED	
D/F/G	CHANGE PRESSURE GOVERNOR TO PUMP BOSS MAX /CORRECTED DOME LIGHT DESCRIPTION/ CHANGED MIRRORS	SED	4-2-25
B/C	CHANGES TO SHELVING/ ADDED ADDITIONAL HARD SUCTION	SED	3-5-24/ 3-13-24
A	PRE-CON	SED	7-31-23

THIS PRINT IS PROVIDED ON A RESTRICTED BASIS AND IS NOT TO BE USED IN ANY WAY DETRIMENTAL TO THE INTEREST OF SUTPHEN CORPORATION.

DRAWN BY: S.DORFMAN
DATE: 4/18/23
MFG. FACILITY: EAST

SUTPHEN

BALLSTON SPA FIRE DEPARTMENT
BALLSTON SPA, NY

CUSTOM STS PUMPER (MODIFIED PS-12)

DWG. NO.: HS-7838