COMPT	DOORS	OPENING DIMENSIONS	INSIDE DIMENSIONS	VOLUME
L1	ROLL-UP	16.75"W x 18.75"H	23.25"W x 38.25"H x 26.50"D	13.64 CU. FT.
L2	HINGED	49.25"W x 24.00"H	58.00"W x 25.25"H x 26.50"D	22.45 CU. FT.
L3	HINGED	49.25"W x 24.00"H	58.00"W x 25.25"H x 26.50"D	22.45 CU. FT.
L4	ROLL-UP	31.25"W x 43.00"H	37.75"W x 49.50"H x 26.50"D	28.65 CU. FT.
L5	ROLL-UP	39.00"W x 43.00"H	45.50"W x 49.50"H X 26.50"D	34.53 CU. FT.
L6	ROLL-UP	39.00"W x 43.00"H	22.50"W x 39.25"H X 26.50"D	13.54 CU. FT.

COMPT	DOORS	OPENING DIMENSIONS	INSIDE DIMENSIONS	VOLUME
R1	ROLL-UP	34.25"W x 19.25"H	40.75"W x 28.75"H x 18.50"D	12.54 CU. FT.
R2	HINGED	49.25"W x 18.75"H	58.00"W x 25.25"H x 26.50"D	22.45 CU. FT.
R3	HINGED	49.25"W x 18.75"H	58.00"W x 25.25"H x 26.50"D	22.45 CU. FT.
R4	ROLL-UP	31.25"W x 43.00"H	37.75"W x 49.50"H x 26.50"D	28.65 CU. FT.
R5	ROLL-UP	39.00"W x 43.00"H	45.50"W x 49.50"H X 26.50"D	34.53 CU. FT.
R6	ROLL-UP	39.00"W x 43.00"H	22.50"W x 39.25"H X 26.50"D	13.54 CU. FT.
A1	HINGED	25.00"W x 9.50"H	25.00"W x 9.50"H X 88.00" D	15.04 CU. FT.
			TOTAL VOLUME	284.28 CU. FT.

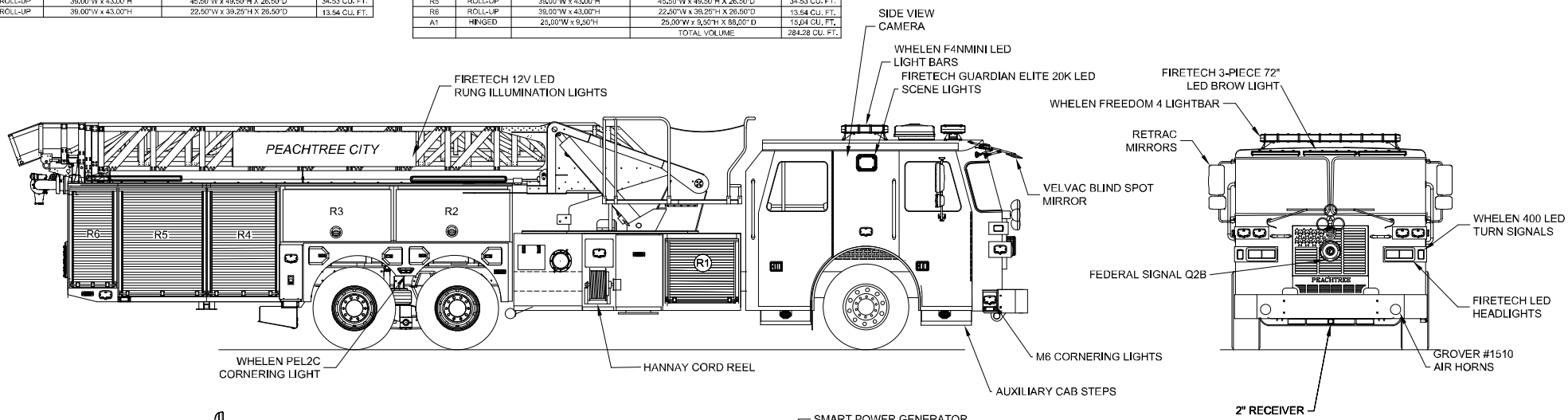

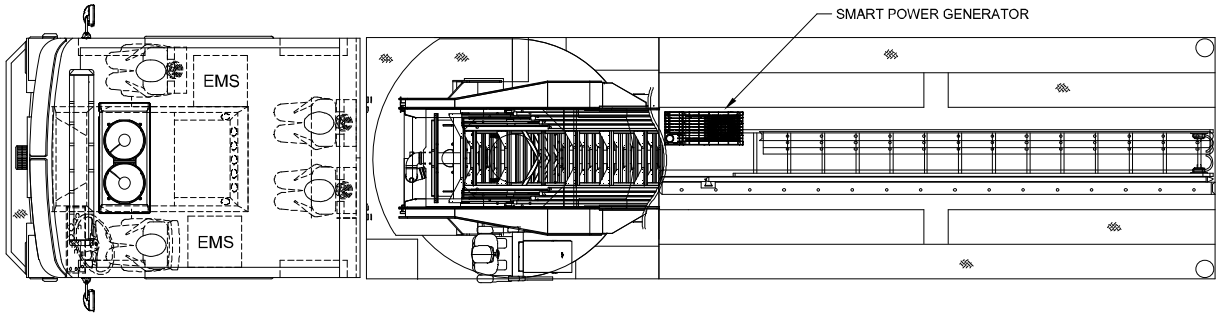

DUO SAFETY ISO
LADDER COMPLIMENT
10' FOLDING (CHUTE)
16' ROOF (CHUTE)
20' ROOF (AERIAL)
28' 2-SEC (CHUTE)
35' 3-SEC (CHUTE)
40' 3-SEC (CHUTE)

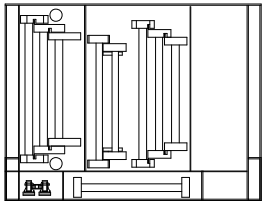

NOT TO SCALE
FOR REFERENCE ONLY

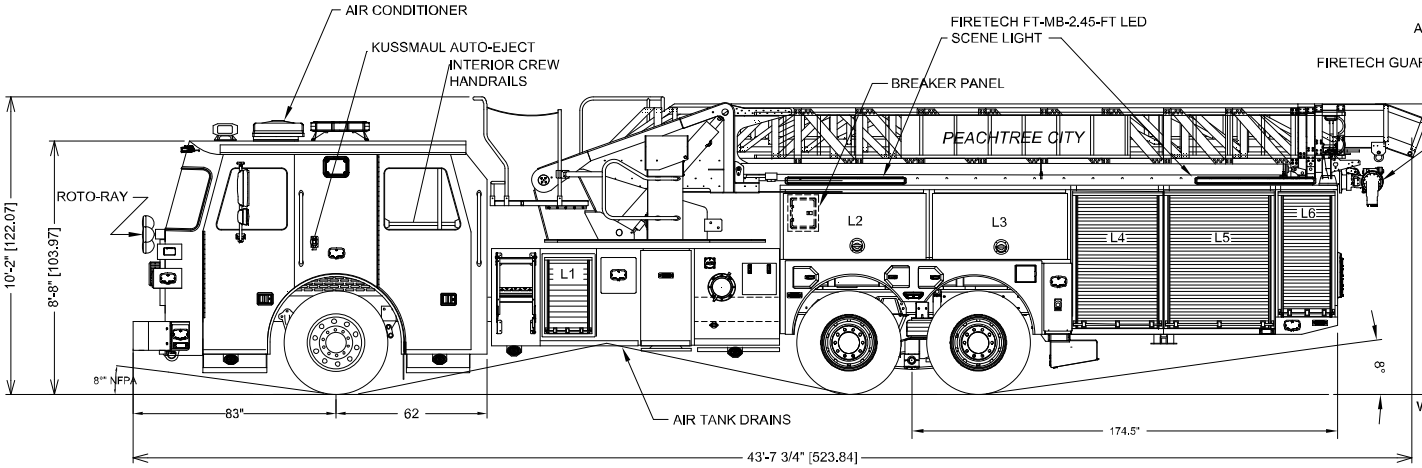

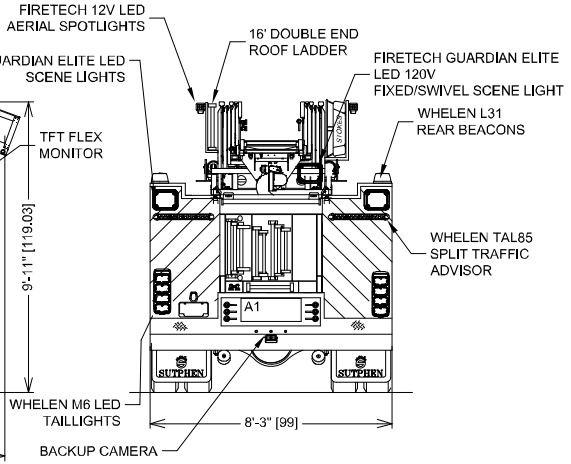

DIMENSIONS SHOWN ON THIS DRAWING ARE APPROXIMATE AND ARE SUBJECT TO MINOR DEVIATIONS DURING CONSTRUCTION.

IN THE EVENT OF A DISCREPANCY BETWEEN THE SUTPHEN SPECIFICATIONS AND DRAWING, THE SUTPHEN SPECIFICATIONS SHALL PREVAIL.

DRAWING IS FOR REFERENCE ONLY. SOME ITEMS PROPOSED MAY NOT BE SHOWN OR NOTED.

CUSTOMER APPROVAL

NAME:

TITLE:

DATE:

REV.	DESCRIPTION	BY	DATE
F	UPDATED MIRRORS TO MATCH SHOP ORDER	CAM	3/21/2025

THIS PRINT IS PROVIDED ON A RESTRICTED BASIS AND IS NOT TO BE USED IN ANY WAY DETRIMENTAL TO THE INTEREST OF SUTPHEN CORPORATION.

DRAWN BY: SJG

DATE: 7/12/2023

MFG. FACILITY: HILLIARD

SUTPHEN

PEACHTREE CITY FIRE DEPARTMENT
PEACHTREE CITY, GA

SL100

DWG. NO. HS-8051