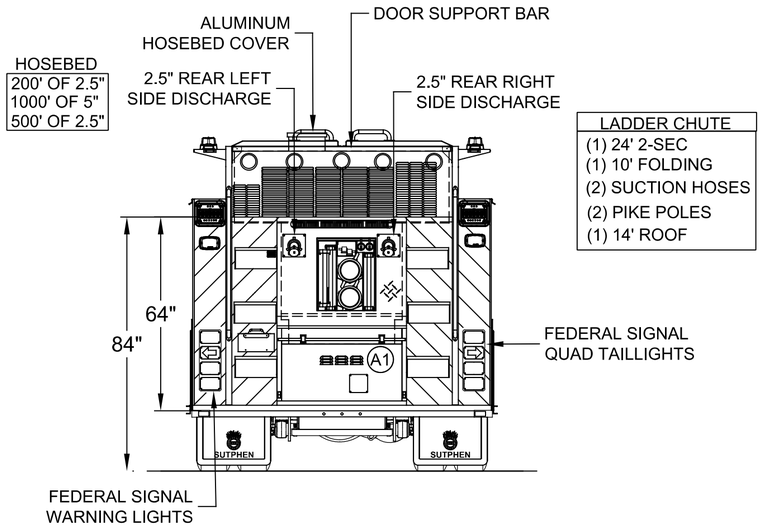

LADDER CHUTE
(1) 24' 2-SEC
(1) 10' FOLDING
(2) SUCTION HOSES
(2) PIKE POLES
(1) 14' ROOF

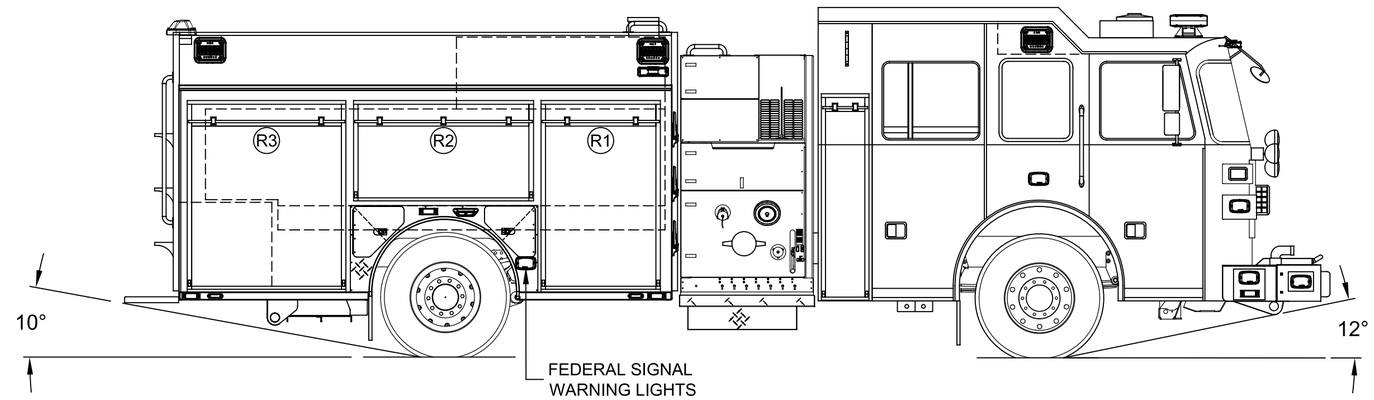

LEFT SIDE COMPARTMENTS					
COMPT	DOORS	OPENING DIMENSIONS	INSIDE DIMENSIONS	VOLUME	
L1	ROLL-UP	37.5"w X 55.4"h	43.1"w X 66"h X 25.8"d	39.6 CU. FT.	(7.5"h X 10.5"d UPPER)
L2	ROLL-UP	57.5"w X 26.2"h	61.6"w X 36.8"h X 25.8"d	29.8 CU. FT.	(7.5"h X 10.5"d UPPER)
L3	ROLL-UP	50.5"w X 55.4"h	53.4"w X 66"h X 25.8"d	49.1 CU. FT.	(7.5"h X 10.5"d UPPER)

RIGHT SIDE COMPARTMENTS					
COMPT	DOORS	OPENING DIMENSIONS	INSIDE DIMENSIONS	VOLUME	
R1	ROLL-UP	37.5"w X 55.4"h	43.1"w X 66"h X 25.8"d	39.6 CU. FT.	(7.5"h X 10.5"d UPPER)
R2	ROLL-UP	57.5"w X 26.2"h	61.6"w X 36.8"h X 25.8"d	29.8 CU. FT.	(7.5"h X 10.5"d UPPER)
R3	ROLL-UP	50.5"w X 55.4"h	53.4"w X 66"h X 25.8"d	49.1 CU. FT.	(7.5"h X 10.5"d UPPER)

REAR STEP COMPARTMENT				
COMPT	DOORS	OPENING DIMENSIONS	INSIDE DIMENSIONS	VOLUME
A1	ROLL-UP	40.5"w X 18.8"h	27"h X 43"w X 31"d	21.6 CU. FT.
			TOTAL:	258.5 CU.FT.

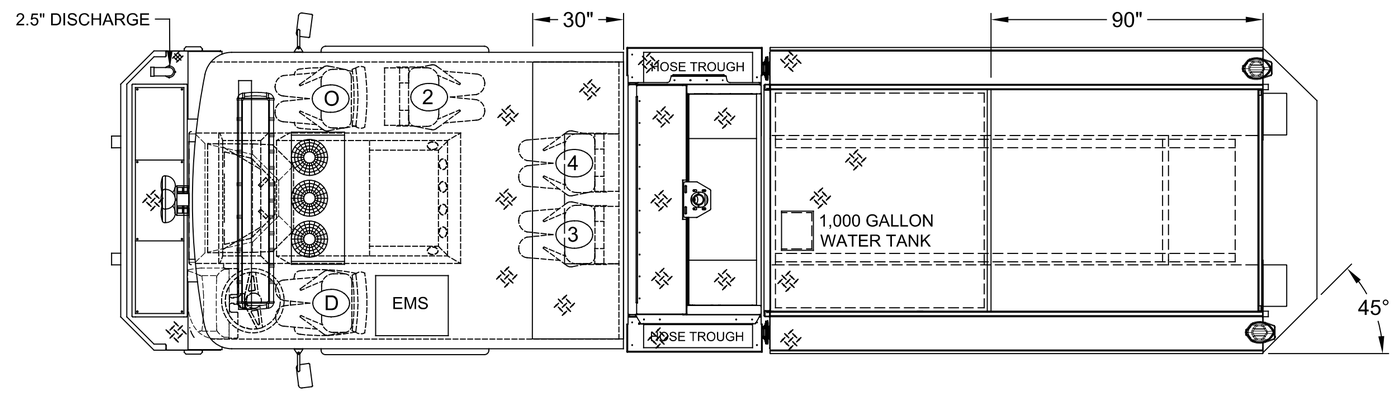

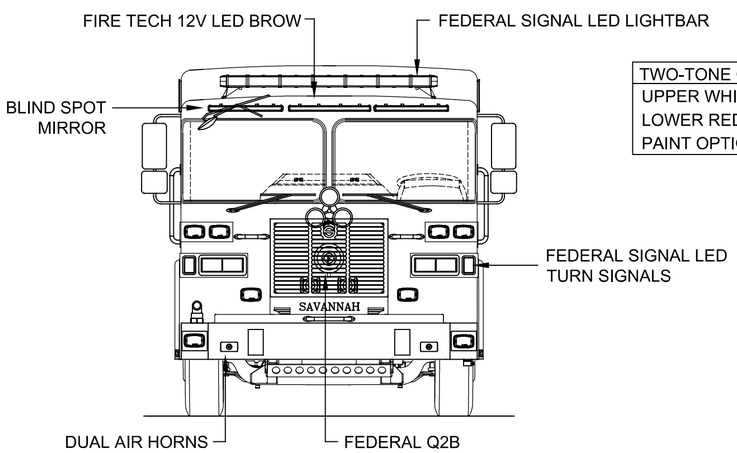

TWO-TONE CAB
UPPER WHITE
LOWER RED
PAINT OPTION #1

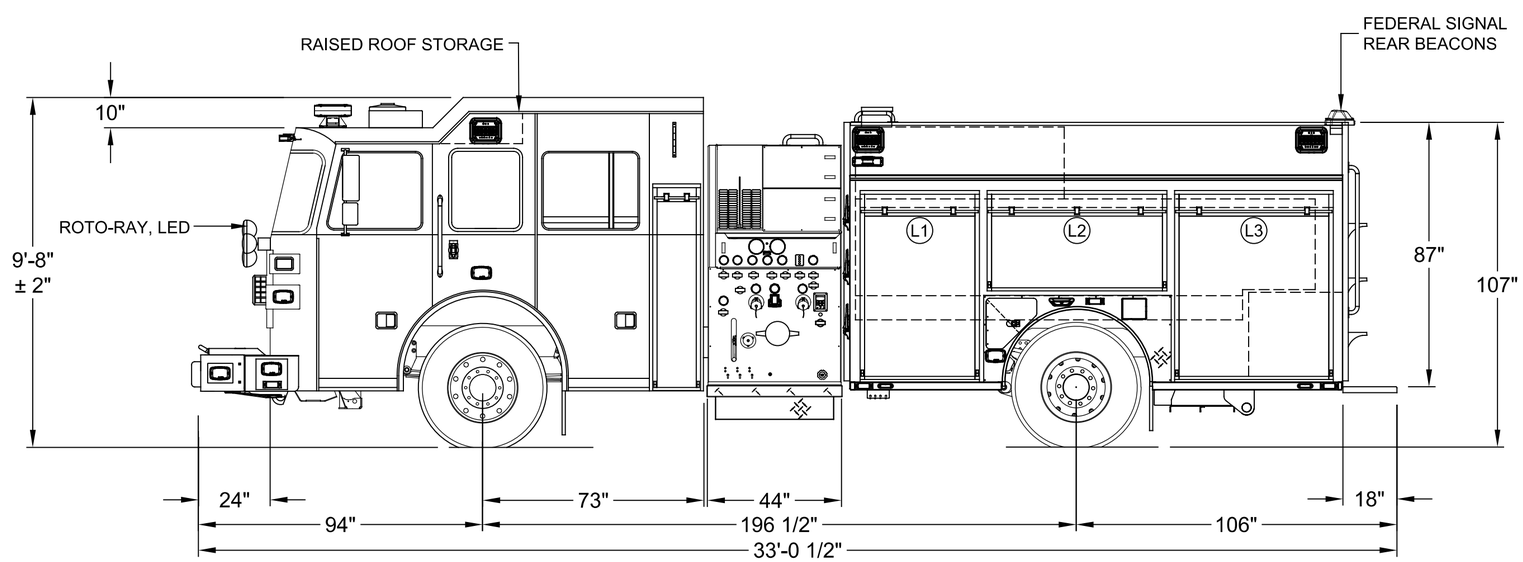

DIMENSIONS SHOWN ON THIS DRAWING ARE APPROXIMATE AND ARE SUBJECT TO MINOR DEVIATIONS DURING CONSTRUCTION.

IN THE EVENT OF A DISCREPANCY BETWEEN THE SUTPHEN SPECIFICATIONS AND DRAWING, THE SUTPHEN SPECIFICATIONS SHALL PREVAIL.

DRAWING IS FOR REFERENCE ONLY. SOME ITEMS PROPOSED MAY NOT BE SHOWN OR NOTED.

CUSTOMER APPROVAL

NAME: _____

TITLE: _____

DATE: _____

REV.	DESCRIPTION	BY	DATE
M	REFERENCE SHOP ORDER REVISION EMAIL	TF	03/31/25
L	REFERENCE SHOP ORDER REVISION EMAIL	TF	02/27/25
K	REFERENCE SHOP ORDER REVISION EMAIL	TF	01/15/25
J	REFERENCE SHOP ORDER REVISION EMAIL	TF	01/15/25

THIS PRINT IS PROVIDED ON A RESTRICTED BASIS AND IS NOT TO BE USED IN ANY WAY DETRIMENTAL TO THE INTEREST OF SUTPHEN CORPORATION.

DRAWN BY: T.FAHOUM

DATE: 12/31/21

MFG. FACILITY: URBANA

SUTPHEN

CITY OF SAVANNAH FIRE DEPARTMENT
SAVANNAH, GA

CUSTOM PUMPER - S9

DWG. NO.: HS-7467