Hose Load
1:300ft of 2-1/2"
2:300ft of 3" DEAD LAY
3:1500ft of 5"
4:400ft of 1-3/4"
5:400ft of 3"

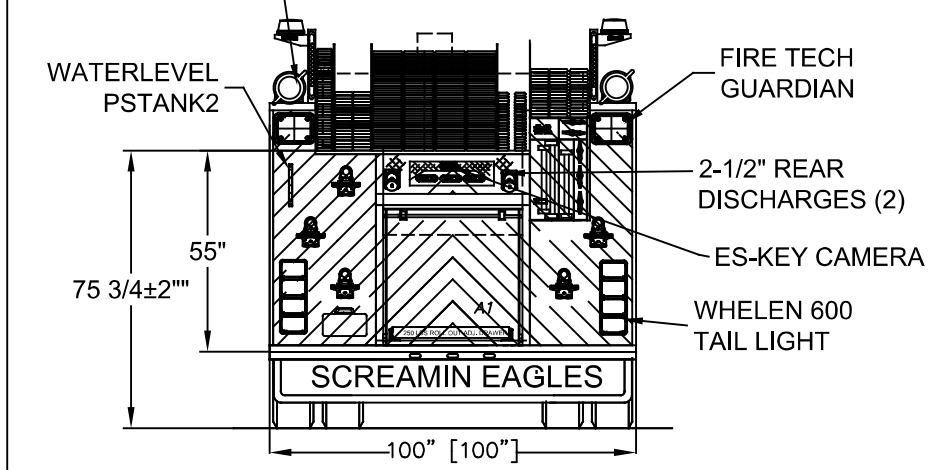

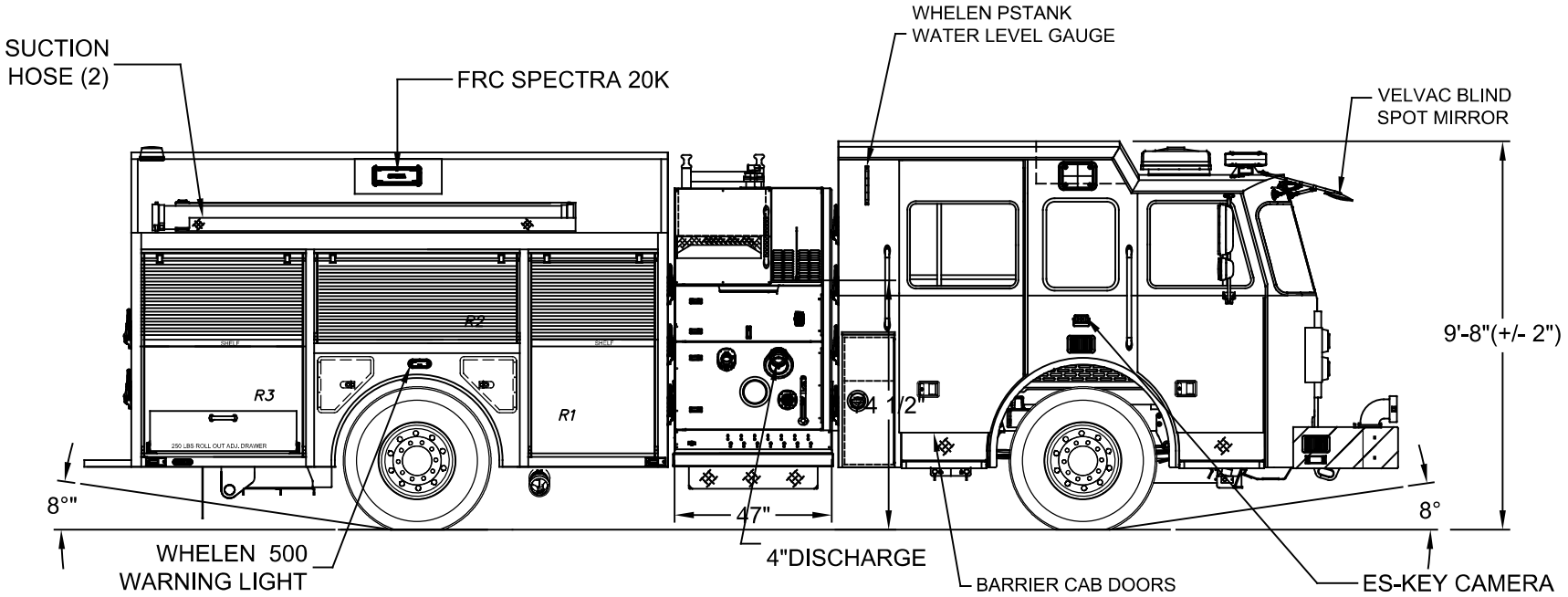

LEFT SIDE COMPARTMENTATION				
COMPT	DOORS	OPENING DIMENSIONS	INSIDE DIMENSIONS	VOLUME
L1	ROLL-UP	37"w X 56 7/8"h	43"w X 66"h X 27 1/4"d	40 CU. FT.
L2	ROLL-UP	57"w X 27 5/8"h	64"w X 32"h X 27 1/4"d	30 CU. FT.
L3	ROLL-UP	50"w X 56 7/8"h	53"w X 66"h X 27 1/4"d	55 CU. FT.

RIGHT SIDE COMPARTMENTATION				
COMPT	DOORS	OPENING DIMENSIONS	INSIDE DIMENSIONS	VOLUME
R1	ROLL-UP	37"w X 50 7/8"h	43"w X 66"h X 27 1/4"d (10 1/2"d upper)	26 CU. FT.
R2	ROLL-UP	57"w X 21 5/8"h	64"w X 32"h X 10 1/2"d	13 CU. FT.
R3	ROLL-UP	50"w X 50 7/8"h	53"w X 66"h X 27 1/4"d (10 1/2"d upper)	43 CU. FT.

REAR STEP COMPARTMENTS				
COMPT	DOORS	OPENING DIMENSIONS	INSIDE DIMENSIONS	VOLUME
A1	ROLL-UP	37 1/2"w X 31"h	40"h X 42"w X 30 1/2"d	27 CU. FT.

TOTAL: 234 CU. FT.

HALE Q-MAX 1750 GPM SS, 750 GAL WATER

LADDER CHUTE
24FT 2-SEC
14FT ROOF
10FT ATTIC
(5) PIKE POLES

FENDER STORAGE
LFF: TRIPLE SCBA
LRF: SINGLE SCBA
RFF: TRIPLE SCBA
RRF: TRIPLE SCBA

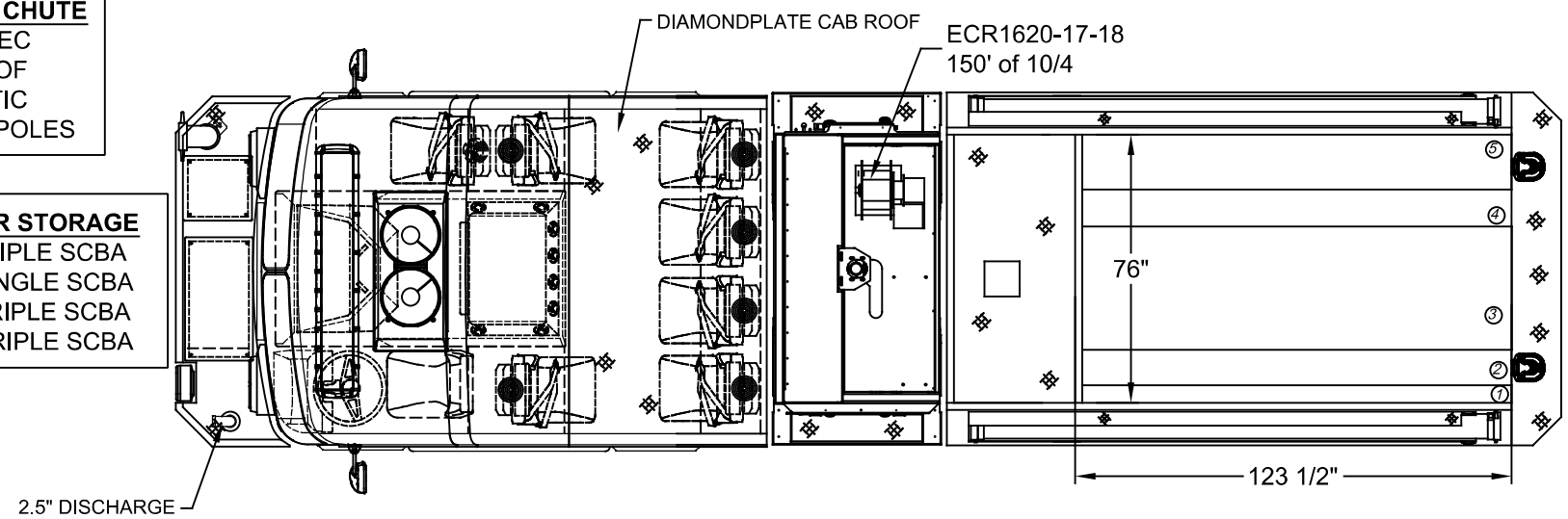

Hose Load
1:300ft of 2-1/2" PRE-CONNECT
2:300ft of 3" DEAD LAY
3:1500ft of 5"
4:400ft of 1-3/4"
5:400ft of 3"

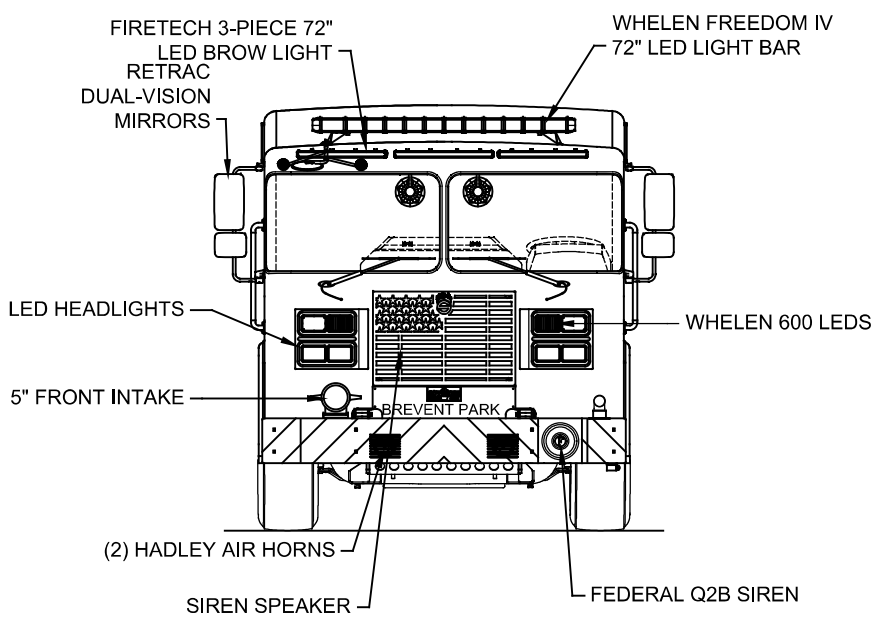

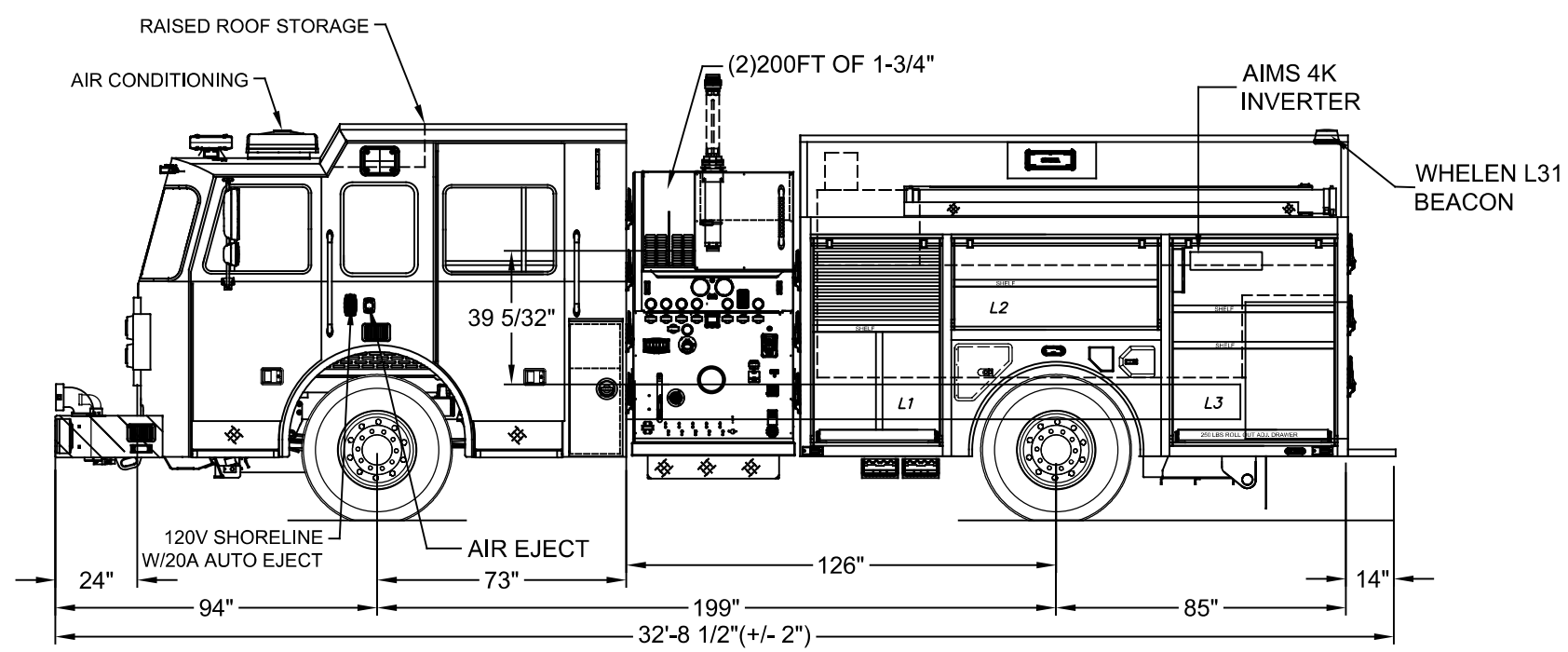

DIMENSIONS SHOWN ON THIS DRAWING ARE APPROXIMATE AND ARE SUBJECT TO MINOR DEVIATIONS DURING CONSTRUCTION.

IN THE EVENT OF A DISCREPANCY BETWEEN THE SUTPHEN SPECIFICATIONS AND DRAWING, THE SUTPHEN SPECIFICATIONS SHALL PREVAIL.

DRAWING IS FOR REFERENCE ONLY. SOME ITEMS PROPOSED MAY NOT BE SHOWN OR NOTED.

CUSTOMER APPROVAL

NAME:

TITLE:

DATE:

REV.	DESCRIPTION	BY	DATE
REV E	DELETE HOT SHIFT PTO, MARKER LIGHT	RR	10/21/24
REV D	ROUND AIR HORNS, INBOARD	RR	07/10/24
REV A	CHANGES FROM PRE-CON	RR	05/01/23

THIS PRINT IS PROVIDED ON A RESTRICTED BASIS AND IS NOT TO BE USED IN ANY WAY DETRIMENTAL TO THE INTEREST OF SUTPHEN CORPORATION.

DRAWN BY: RAGHU
DATE: 04/01/2022
MFG. FACILITY: EAST

SUTPHEN

BREVENT PARK
LEONARDO, NJ

CUSTOM PROGRAM PUMPER - S-3

DWG. NO.: HS-7721