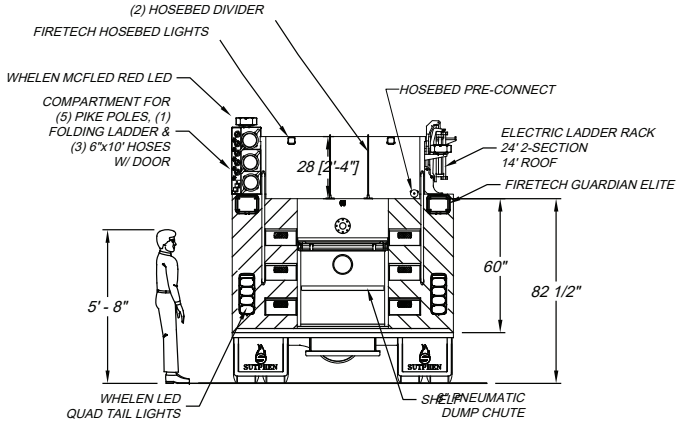


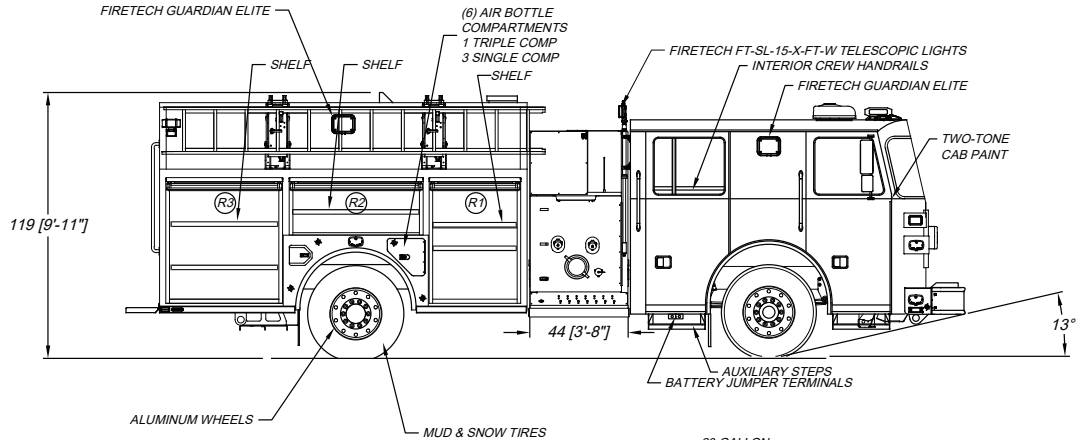


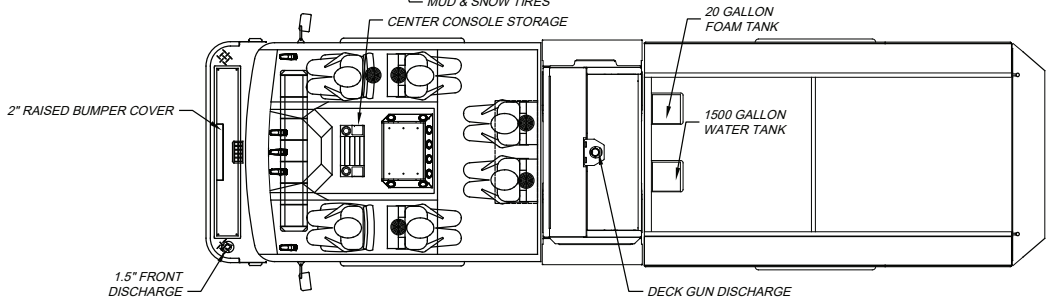


| LEFT SIDE COMPARTMENTATION | | | | |
|---|---|---|---|---|
| COMPT | DOORS | DIMENSIONS | VOLUME | |
| L1 | ROLL-UP | 40"W X 51 1/2"H X 26"D | 28 CU. FT. | 14 1/2" DEEP, UPPER |
| L2 | ROLL-UP | 59"W X 21 1/2"H X 14 1/2"D | 11 CU. FT. | |
| L3 | ROLL-UP | 51 1/2"W X 51 1/2"H X 26"D | 40 CU. FT. | FULL HEIGHT, FULL DEPTH |

| RIGHT SIDE COMPARTMENTATION | | | | |
|---|---|---|---|---|
| COMPT | DOORS | DIMENSIONS | VOLUME | |
| R1 | ROLL-UP | 40"W X 51 1/2"H X 26"D | 28 CU. FT. | 14 1/2" DEEP, UPPER |
| R2 | ROLL-UP | 59"W X 21 1/2"H X 14 1/2"D | 11 CU. FT. | |
| R3 | ROLL-UP | 51 1/2"W X51 1/2"H X 26"D | 40 CU. FT. | FULL HEIGHT, FULL DEPTH |

| REAR STEP COMPARTMENT | | | |
|---|---|---|---|
| COMPT | DOORS | DIMENSIONS | VOLUME |
| A1 | ROLL-UP | 39 1/2"W X 39"H X 31"D | 27 CU. FT. |

| REAR CREW SEAT COMPARTMENT | | | |
|---|---|---|---|
| COMPT | DOORS | DIMENSIONS | VOLUME |
| C1 | HINGED | 47"W X 15"H X 18 1/2"D | 8 CU. FT. |

TOTAL STORAGE: 193 CU. FT.

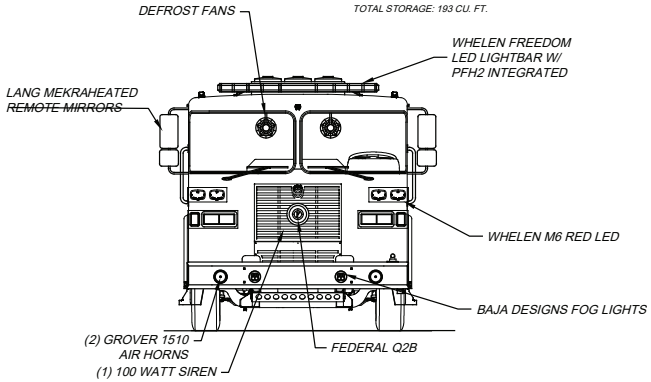


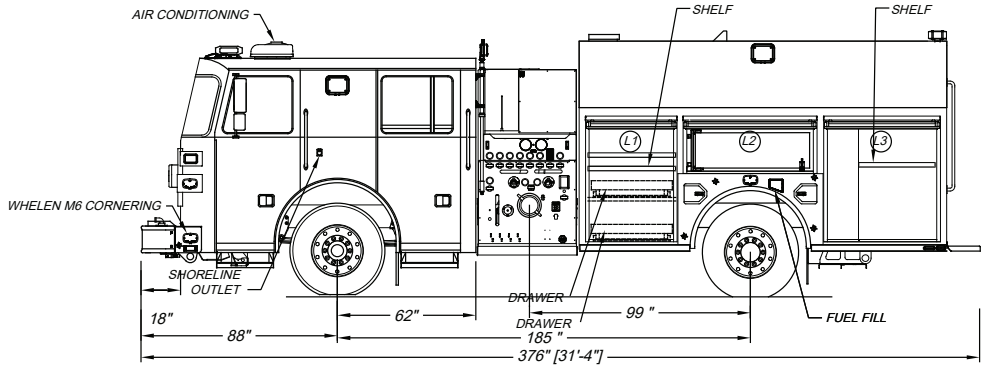


DIMENSIONS SHOWN ON THIS DRAWING ARE APPROXIMATE AND ARE SUBJECT TO MINOR DEVIATIONS DURING CONSTRUCTION.

IN THE EVENT OF A DISCREPANCY BETWEEN THE SUTPHEN SPECIFICATIONS AND DRAWING, THE SUTPHEN SPECIFICATIONS SHALL PREVAIL.

DRAWING IS FOR REFERENCE ONLY. SOME ITEMS PROPOSED MAY NOT BE SHOWN OR NOTED.

CUSTOMER APPROVAL

NAME:

TITLE:

DATE:

| REV. | DESCRIPTION | BY | DATE |
|---|---|---|---|
| B | UPDATED TO MATCH SHOP ORDER REV B | AA | 4/11/22 |
| A | UPDATED TO MATCH SHOP ORDER REV A | AA | 2/8/22 |

THIS PRINT IS PROVIDED ON A RESTRICTED BASIS AND IS NOT TO BE USED IN ANY WAY DETRIMENTAL TO THE INTEREST OF SUTPHEN CORPORATION.

DRAWN BY: A.ALEXANDER

DATE: 7/16/21

MFG. FACILITY: URBANA

SUTPHEN

INLET VOLUNTEER HOSE CO.
INLET, NY

PROGRAM 1 CUSTOM PUMPER, G7 BODY

DWG. NO.: HS-7133