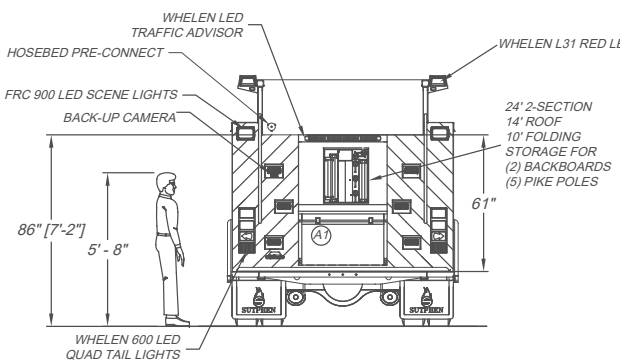

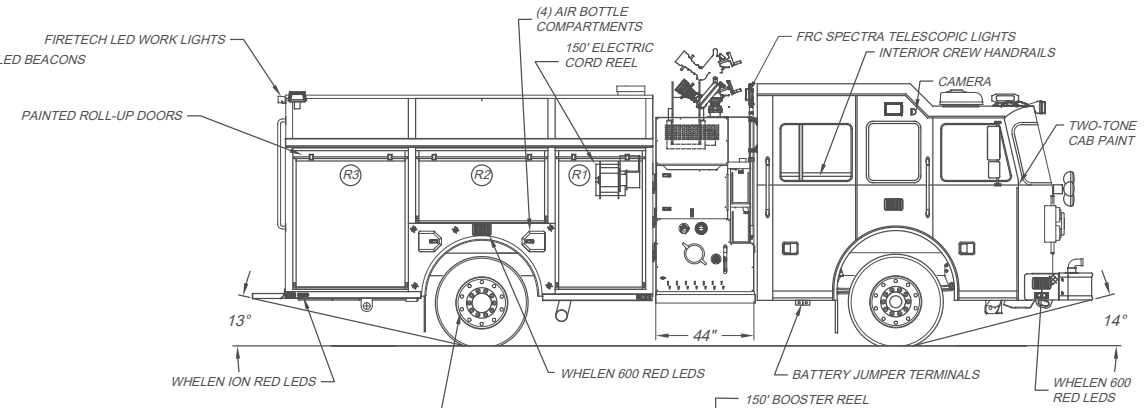

LEFT SIDE COMPARTMENTATION				
COMPT	DOORS	INSIDE DIMENSIONS	DOOR OPENING DIMENSIONS	VOLUME
L1	**ROLL-UP**	40"W X 66"H X 26"D	**37 1/2"W X 56 1/2"H**	37.4 CU. FT.
L2	**ROLL-UP**	59"W X 31 1/2"H X 26"D	**56 1/4"W X 27"H**	28.4 CU. FT.
L3	**ROLL-UP**	51 1/2"W X 66"H X 26"D	**48 3/4"W X 56 1/2"H**	47.4 CU. FT.

RIGHT SIDE COMPARTMENTATION				
COMPT	DOORS	INSIDE DIMENSIONS	DOOR OPENING DIMENSIONS	VOLUME
R1	**ROLL-UP**	40"W X 66"H X 26"D	**37 1/2"W X 56 1/2"H**	37.4 CU. FT.
R2	**ROLL-UP**	59"W X 31 1/2"H X 26"D	**56 1/4"W X 27"H**	28.4 CU. FT.
R3	**ROLL-UP**	51 1/2"W X 66"H X 26"D	**48 3/4"W X 56 1/2"H**	47.4 CU. FT.

REAR STEP COMPARTMENT				
COMPT	DOORS	INSIDE DIMENSIONS	DOOR OPENING DIMENSIONS	VOLUME
A1	ROLL-UP	39 1/2"W X 28"H X 31"D	36 3/4"W X 19"H	19.8 CU. FT.

BASE STORAGE: 246 CU. FT.

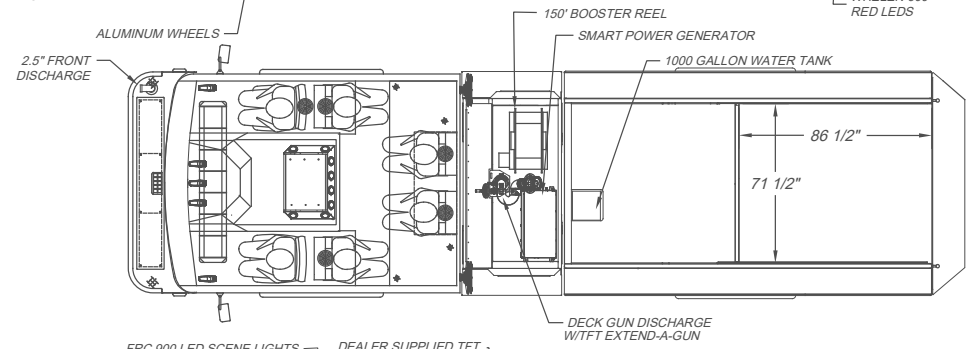

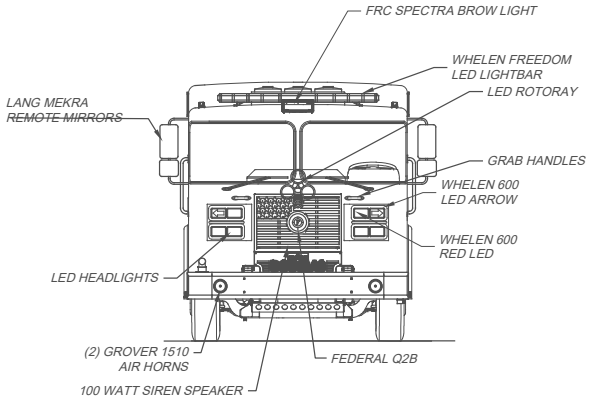

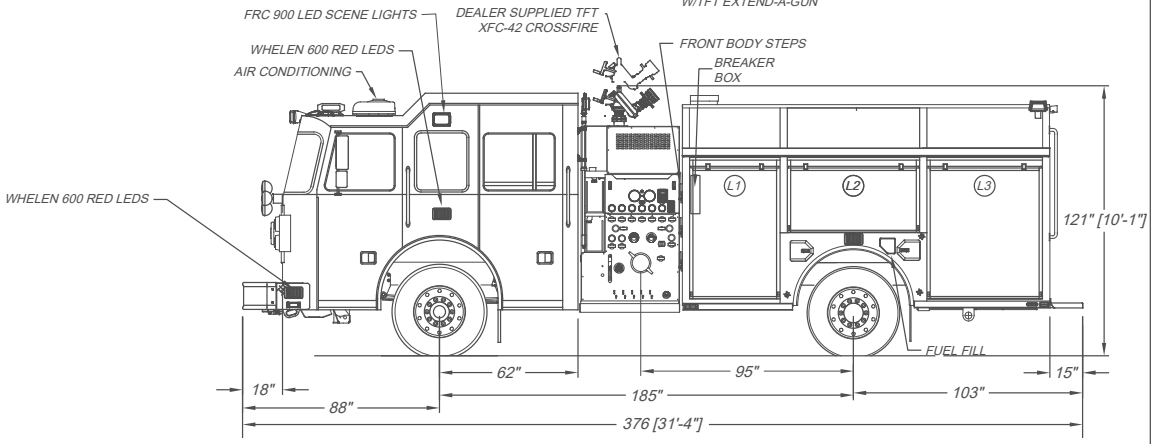

DIMENSIONS SHOWN ON THIS DRAWING ARE APPROXIMATE AND ARE SUBJECT TO MINOR DEVIATIONS DURING CONSTRUCTION.

IN THE EVENT OF A DISCREPANCY BETWEEN THE SUTPHEN SPECIFICATIONS AND DRAWING, THE SUTPHEN SPECIFICATIONS SHALL PREVAIL.

DRAWING IS FOR REFERENCE ONLY. SOME ITEMS PROPOSED MAY NOT BE SHOWN OR NOTED.

CUSTOMER APPROVAL

NAME: _____

TITLE: _____

DATE: _____

REV.	DESCRIPTION	BY	DATE
B	UPDATED LADDER CHUTE	R.C.	5/18/22
A	UPDATED TO SHOP ORDER REV A	R.C.	9/22/21

THIS PRINT IS PROVIDED ON A RESTRICTED BASIS AND IS NOT TO BE USED IN ANY WAY DETRIMENTAL TO THE INTEREST OF SUTPHEN CORPORATION.

DRAWN BY: R.CAMPBELL

DATE: 7/9/2021

MFG. FACILITY: URBANA PUMPER DIVISION

SUTPHEN

DOUGLAS, CITY OF
DOUGLAS, GA

PROGRAM 1 CUSTOM PUMPER

DWG. NO.: HS-7128